NPSS NEWS

ISSUE 2: JUNE 2019

A PUBLICATION OF THE INSTITUTE OF ELECTRICAL & ELECTRONICS ENGINEERS

Nuclear and Space Radiation Effects Conference 2019 (NSREC)

Marriott Rivercenter Hotel, San Antonio, Texas, July 8th–12th, 2019

The 56th annual Nuclear and Space Radiation Effects Conference (NSREC) will be held July 8th -12th, 2019 in San Antonio, Texas at the Marriott Rivercenter Hotel. The conference is sponsored by IEEE Nuclear and Plasma Science Society (NPSS) with guidance provided by the Radiation Effects Steering Group (RESG). John Stone, Southwest Research Institute, is the General Conference Chair, and Janet Barth, NASA (retired), is RESG Chair. Corporate supporters of the conference include BAE, Boeing, Cobham Semiconductor Solutions, Harris, Intersil Space Products, IR HiRel Products, (An Infineon Technologies Company), Jet Propulsion Laboratory, Southwest Research Institute, The Aerospace Corporation, and VPT.

The NSREC organizing committee has worked hard to offer an interesting venue and outstanding program for this year's conference and will continue the tradition of previous NSRE Conferences by offering a three and one-half day Technical Program, a one-day Short Course that precedes the technical program, a Radiation Effects Data Workshop, and an Industrial Exhibit. Engineers, scientists, and managers from around the world who are interested in radiation effects will attend. Technical and social programs have been planned to maximize opportunities for those in all areas of the radiation effects field to exchange information and to network.

TECHNICAL PROGRAM

The Technical Program Chair, Simone Gerardin, University of Padova, and his committee have assembled an outstanding set of technical papers

Simone Gerardin
Technical Program Chair

John Stone
General Chair

Teresa Farris
Publicity Chair

that are organized into ten oral sessions and a poster session. Papers presented in the NSREC technical sessions are expected to be submitted for publication after the conference in the January issue of the IEEE *Transactions on Nuclear Science* (TNS), subject to the standard TNS peer review process. A Radiation Effects Data Workshop is also included in the Technical Program with papers that emphasize data on electronic devices and systems and descriptions of new simulation tools and radiation test facilities. These papers will appear in a non-peer-reviewed workshop record. In addition to the contributed papers, three invited talks will be presented that are of general interest to conference attendees and their companions. Guest speakers and their topics include:

Automated Vehicles and the Road Ahead

Chris Mentzer, Assistant Director, R&D, Southwest Research Institute

Parker Solar Probe: A Mission to Touch the Sun

Dr. Jim Kinnison, PSP Mission System Engineer, The Johns Hopkins University Applied Physics Laboratory

Spanish Exploration and the Beginnings of Texas Natural History

Dr. Jesús F. de la Teja, Chief Executive Officer, Texas State Historical Association

CONFERENCES Continued on PAGE 2

Conferences Continued from PAGE 1

SHORT COURSE

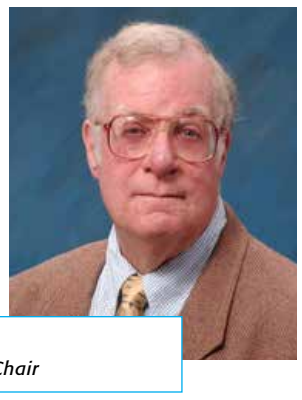

Steve Moss
Short Course Chair

The Short Course Chair is Steven Moss, The Aerospace Corporation (retired). The theme of the 2019 course is **Predicting, Characterizing, And Mitigating Single Event Effects (SEE) In Advanced Semiconductor Technologies**. Each short course attendee will receive a CD and Memory stick of the Short Course notes.

Presentations and speakers for the four parts of the short course are:

Part I—Basics Of Single Event Effect Mechanisms And Predictions

Dr. Daisuke Kobayashi, ISAS/JAXA, Japan

Part II–SEE Testing With Broad And Focused Particle Beams

Dr. Arto Javanainen, University of Jyväskylä, Department of Physics, Finland

Part IIIA–Laser-Based Testing For SEE

Dr. Dale McMorrow, US Naval Research Laboratory, USA

Part IIIB–Current Status And Future Prospects For Pulsed X-Ray SEE Testing

Mr. Stephen LaLumondiere, The Aerospace Corporation, USA

Part IV—SEE Test And Analysis Of Complex Devices In Advanced Technologies: From Cells To Systems

Mr. Manuel Cabanas-Holmen, The Boeing Company, USA

SOCIAL EVENTS

Brian Sierawski
Local Arrangements Chair

Brian Sierawski, Vanderbilt University, is the Local Arrangements Chair. He has arranged an exciting social program for San Antonio. The Conference Social, at the Buckhorn and Texas Ranger Museums, will be held on Wednesday evening. Two companion events, held on Tuesday and Thursday, include the Highlights of San Antonio and San Antonio Missions Tours.

INDUSTRIAL EXHIBIT

Gregg Panning, The Aerospace Corporation, is the Industrial Exhibit Chair. The exhibit will allow conference attendees to discuss new developments in radiation-hardened and radiation-tolerant electronics, engineering services, facilities, and equipment with participating vendors. A reception will be provided on Tuesday evening in the exhibit area for attendees and their companions that showcases the Industrial Exhibit. If you need more information about the exhibit, please visit http://www.nsrec.com, or contact Gregg at Gregg.s.panning@aero.org. We look forward to welcoming the 45-55 exhibitors.

SAN ANTONIO, TEXAS

Deep in the heart of Texas, San Antonio's bold spirit and historic legacies make it an ideal gateway to the region's culture, scenic beauty, and restful retreats. San Antonio has been part of colonial Spain, the Republic of Mexico, the Republic of Texas, and since 1845, the United States, and relics and tales from this iconic past linger along the city streets and byways.

Originally colonized by Spain, San Antonio has five beautifully preserved Spanish colonial missions which together have been designated a UNESCO World Heritage Site. Included among these missions is the Alamo, the site of a famous battle for Texas independence. A short distance from the Alamo is La Villita Historic Arts Village, a small village of stone houses left by early settlers, now full of life and commerce. Commerce also thrives a few blocks away at Market Square. Known as the largest Mexican market north of the Rio Grande, Market Square is filled with local and imported pieces of art, pottery, jewelry and textiles.

One distinct locale that houses many of San Antonio's unique offerings is the River Walk. Here you will find 15 miles of meandering paths along the banks of the San Antonio River connecting a Texas-sized sampling of hotels, restaurants, shops, historic landmarks, museums, missions, and more. There is something for every taste on the river walk, whether it is the River Bend where visitors and locals dine aboard river cruisers, and the sounds of mariachis echo from the stone bridges, the Museum Reach with its quieter vibe, or the Mission Reach with its restored river ecosystem and opportunity for biking and exploring. This is the river that originally inspired the San Antonio's settlement, and it still flourishes today as the city's center.

From the Marriott Rivercenter, step out onto the River Walk, visit the Alamo, and enjoy one of America's most authentic destinations. It is a city alive: a city of poets and lyricists, painters and sculptors, a city rich and humble. Please join us for NSREC 2019 in San Antonio.

ADDITIONAL INFORMATION

For the latest information on the conference, including the technical program, local arrangements, hotel and travel information, and registration forms, please visit our web site at http:/www.nsrec.com.

Alternatively, you may contact the General Chair, John Stone, Southwest Research Institute, E-mail: jstone@swri.edu.

You may also contact the Publicity Chair, Teresa Farris, E-mail: teresa.farris@archon-llc.com

2019 Nuclear Science Symposium and Medical Imaging Conference

Paul Marsden
NMISC Chair

The IEEE 2019 Nuclear Science Symposium (NSS) and Medical Imaging Conference (MIC), and the 26th International Symposium on Room Temperature Semiconductor Detectors (RTSD), will be held at the Manchester Central Convention Centre, in Manchester, UK, from the 26th of October to the 2nd of November, 2019. The 'NSS-MIC' is the leading annual international meeting for all scientists, engineers, researchers, medical physicists, students and increasingly computer scientists with an interest in radiation detectors, related technologies and their applications. Delegates usually have a primary interest in either the NSS or the MIC, but many attend sessions from both parts of the meeting.

The program chairs have put a lot of effort into updating the program to cover both established and emerging areas. The NSS will cover all varieties of detectors - gaseous detectors, scintillators, strip and pixel detectors - and all associated readout and computing along with applications in nuclear, high energy and astro physics, as well as applied areas including space, homeland security, neutrons and reactor instrumentation, radiation hardness, and synchrotron and FEL light sources. The core MIC topics are detectors, systems and data reconstruction/processing for radionuclide and X-ray imaging, with new areas including methodology for study standardization, uses of AI, machine learning, deep learning in systems and data processing/interpretation, and novel applications related to targeted radionuclide therapy, new radiotracers and contrast agents. RTSD is concerned with all aspects of room temperature semiconductor detectors including fabrication and new materials, and

NUCLEAR & PLASMA SCIENCES SOCIETY NEWS

(USPS 000-560) is published quarterly by the Nuclear & Plasma Sciences Society of the Institute of Electrical and Electronics Engineers, Inc. Corporate Office: 3 Park Avenue, 17th Floor, New York, NY 10016-5997, **https://www.ieee.org/about/contact.html**. Printed in the USA. One dollar per member per year is included in the Society fee for each member of the Nuclear & Plasma Sciences Society. Periodicals postage paid at New York, NY and at additional mailing offices. Postmaster: Send address changes to Nuclear & Plasma Sciences News, IEEE, 445 Hoes Lane, Piscataway, NJ 08854.

applications with X-rays, gamma rays and neutrons. More details can be found in the 'program' section of the conference website nssmic.ieee.org/2019/

The most innovative and topical submissions are presented in the oral programme, however, traditionally the NSS-MIC also puts a lot of emphasis on the complementary programme of poster sessions which provide opportunities to discuss work informally with other researchers. Poster sessions are particularly valuable in helping early stage researchers get to know others in their field. Some big plenary presentations include talks on computer architectures to model the human brain, big international projects including the Square Kilometer Array and the European Spallation Source, radiation detectors, medical robotics and photon counting CT. All these will be given by leading high-profile researchers and are likely to be of interest to everyone attending the meeting. A program of short courses from expert lecturers and workshops on hot topics will take place before and during the meeting - see the website for details.

A large industrial exhibition will include all the major suppliers of radiation instrumentation and related products and provides an opportunity to talk to the companies' scientists and engineers. Interaction with colleagues in industry is encouraged in associated technical sessions, an exhibitors' reception on Tuesday, and at a technology transfer session that is being planned.

The conference will be held in the Manchester Central Convention Centre, which has been developed from the abandoned historic Manchester Central Railway Station. The main station concourse, with its single-span arched roof, will accommodate the industrial exhibition together with adjacent poster sessions and coffee areas. The conference reception on Wednesday will also be held here. Many delegates probably spend as much time talking to each other as attending the formal sessions, and as people get more senior I know they often unfortunately don't have time to attend any sessions at all—to facilitate networking and discussions there will be plenty of casual seating areas throughout the venue. A full social program includes evening dinners for NSS and MIC and an RTSD Luncheon which will all be held at central venues within easy walking distance of the meeting

Manchester was at the heart of the industrial revolution, and is the UK's de facto second city. You will come across reminders of its rich heritage on any short walk around the city centre. More recently, Manchester has become a hub for contemporary art and culture with a profusion of galleries and venues. It has a legendary music scene, and two football teams competing at the highest level in Europe. There are all kinds of restaurants, cafes, pubs and a wide variety of accommodation across all price ranges, all within an easy distance of the meeting venue. Hotels can be booked via the conference website with specially negotiated rates for delegates and visitors.

The city is well connected internationally by air, two hours by train from London, and makes an ideal stepping off point for visits to many of the UK's most interesting and scenic regions. A program of tours taking in places of interest in and around Manchester has been arranged.

Financial support to attend the meeting can be applied for. The NPSS Paul Phelps Continuing Education Grant, the Valentin T. Jordanov Radiation Instrumentation Travel Grant, the NPSS Child Care Assistance Grant and the Conference Trainee Grants will be available in 2019. Please see the website for information on eligibility, deadlines and how to apply.

Please check https://nssmic.ieee.org/2019/ e regularly for updates! The organising committee looks forward to welcoming you to Manchester in October !

Paul Marsden, General Chair, can be reached by e-mail at nssmic2019@ieee.org

President's Report

Ron Schrimpf
IEEE NPSS President

The Nuclear and Plasma Sciences Society recently underwent a review by the Society and Councils Review Committee of the IEEE. These reviews take place every five years and provide valuable external feedback. The good news is that NPSS is doing very well, but this also provides an opportunity to reflect on where we are and where we are going. The main recommendation of the SCRC is that we should consider developing an NPSS strategic plan, a recommendation that we intend to implement. Steve Meikle from the University of Sydney, the NPSS Vice President, will be leading the strategic planning activity. We currently conduct strategic planning activities at an annual retreat, in addition to related activities at each of the NPSS AdCom meetings, which are held three times per year. The most recent of these meetings was held in Nashville in March (a convenient location for me, since I work at Vanderbilt!). Your thoughts and input related to the plan are welcome.

The activities of the NPSS are organized around our Fields of Interest. Each IEEE Society is required to have a concise FOI statement, to define its mission clearly, reduce unnecessary overlap, and promote collaboration. The NPSS FOI is:

The fields of interest of the Society are the nuclear and plasma sciences and related emerging technologies. Areas of technical activity include: computer applications in nuclear and plasma sciences; fusion technology; nuclear medical and imaging sciences; radiation instrumentation; radiation effects; particle accelerator science and technology; plasma science and applications; pulsed power science and technology; and nuclear power instrumentation and control systems.

The goals of NPSS, as identified in our review, are:

» Organizing and supporting many symposia, conferences and workshops each year. This includes events directly sponsored by the NPSS, as well as numerous cosponsored events.

» Publishing high-quality technical work that benefits members of the NPSS community. This is accomplished through four *Transactions* (one in collaboration with three other societies and one in collaboration with one other society).

» Maintaining effective communication with our members and reaching out to new potential members. This is accomplished through a high-quality Newsletter (which you are reading now!) that reaches all members four times a year and is available for download on our website. We also maintain an active online presence through social media, as well as through regular updates of our Society website. In addition, we also have an active recruitment program at each of our conferences as well as at many cosponsored conferences.

» Presenting awards to recognize major contributions to the fields of interest described above. This provides recognition for individuals working in these fields as well as encouragement to join and participate in Society conferences and publications.

» Organizing events for under-represented minorities such as Women in Engineering and Young Professional meetings at several of our conferences. Certain of our conferences also host K-12 teacher and student programs as well as special sessions for student-only papers.

» Organizing and sponsoring our Distinguished Lecturers (DL) Program to present lectures at NPSS Chapter, IEEE Section, and Student Chapter meetings. In addition, DLs are available to other IEEE entities and to non-IEEE organizations, such as universities and colleges.

» Providing service to humanity in areas related to the Society field of interest. Examples include playing a leadership role in the IEEE Smart Village Program and organization of summer schools. The IEEE Smart Village is a humanitarian outreach program of the IEEE, which is one of the IEEE Foundation's four "Priority Programs." Its goal is to deliver immediate impact to the world's poorest and most energy-deprived populations. As a multisociety initiative, Smart Village also provides an opportunity for NPSS to collaborate with other IEEE Societies with common interests in design and delivery of energy, education, and technology to the far off-grid electricity impoverished.

In other news, we welcome Zane Bell of Oak Ridge National Laboratory as editor-in-chief of the *Transactions on Nuclear Science*. Zane previously served as an Associate Editor and he will be working closely with Paul Dressendorfer, the former EIC, during a transition period. Paul continues as the NPSS Publications Chair, which is particularly important as we adapt to changes in the publishing scene, most notably associated with the "open access" publishing. In this model published papers are freely available online without a journal subscription. In this case, the funding organizations associated with the authors' work may pay the costs of publishing upfront. The IEEE currently publishes IEEE Access, a multidisciplinary, all-electronic archival journal, continuously presenting the results of original research or development across all of IEEE's fields of interest. Society-specific open-access journals will be introduced by some IEEE Societies, but NPSS does not plan to introduce one in the short term—stay tuned for future developments.

As always, I welcome your feedback. Sincerely,

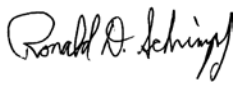

Ron Schrimpf, IEEE NPSS President, can be reached by E-mail at ron.schrimpf@vanderbilt.edu

Secretary's Report

Albe Larsen
IEEE NPSS Secretary and Newsletter Editor

The NPSS Administrative Committee (AdCom) held its annual retreat and first regular meeting of 2019 on March 8th and 9th in Nashville, TN at the Nashville Marriott Vanderbilt. We welcomed new AdCom members Adam Alessio, Keith Avery, Ken Galloway and Sara Pozzi, new TC chairs Janet Barth (past Awards chair), Chiara Guazzoni and Joe Schumer, as well as Zane Bell, the new Editor-in-Chief of TNS, and Jane Lehr, returning to AdCom to chair a new Fellows search committee.

Our treasurer, Ralf Engels, noted that conference closings are better and the books for a number of conferences are in audit. The chair of the TC sponsoring a conference is responsible for ensuring that books are closed in a timely way. Conference Finance is also sending out reminders now at about six months after a conference ends, which is helping. The new system of having a conference budget and interim conference treasurer is working well and will ensure costs are attributed properly to each conference.

While we do well in recruiting new members, only about half remain for a second year. How can we help in improving retention? Let us know!

NPSS also invests a considerable amount in awards. Please make sure these are publicized appropriately. Each TC should have an Awards chair responsible for placing articles to acknowledge award recipients and to include such information on their TC web sites..

All expense reports for NPSS are now to be submitted using Concur, an electronic expense report program that also has an app that people seem to like.

Our new president, Ron Schrimpf of Vanderbilt University, had a TAB meeting in Tampa, FL in February. He has, in his report, covered our Society Review, held during that meeting. The review was extremely positive. Good Job!

A key issue discussed at TAB was sexual harassment and the need for a conference code of conduct as well as more robust procedures for reporting and enforcing the code of conduct. Note that each conference web site must now include this code.

IEEE has initiated a TryEngineering summer institute for kids aged 12 – 17 from around the world to provide an opportunity to engage in hands-on design work with professional engineers, explore both today's problems and those of the future, with the goal of educating young people on what it means to be an engineer.

IEEE is experiencing a number of changes. Among these, Open Access and a new overhead distribution algorithm for funds used to support IEEE, will affect us, but it will be some time before we know how, or exactly what the overhead changes will be. There will also be a change in the distribution algorithm from the IEEE All Society Periodical Package which is predicted to have a negative impact on our income. Other items being reviewed are the costs of technically cosponsoring conferences, and IEEE review of contracts, with the development of contract management infrastructure pending.

SOCIETY GENERAL BUSINESS
Continued on PAGE 4

Secretary's Report

Continued from PAGE 3

TECHNICAL COMMITTEES

Reports are available below from a number of the Technical Committees. Please read about yours! In aggregate our TCs and the conferences they sponsor are doing well.

Key to note is that Pulsed Power Science and Technology have revised their Constitution and Bylaws, the first revisions since becoming an elected TC. See the marked up C&BL under Technical Committees.

FUNCTIONAL COMMITTEES

See the report from John Verboncoeur, Awards Committee chair on this year's Society awards, and information on applications for future awards.

The number of NPSS chapters and student branch chapters continues to grow, with a total now of 23 section and joint chapters and ten student branch chapters. Efforts to create additional chapter of all categories are under way worldwide.

Membership remains steady at +/- 3,000 with ~18% students, 6.6% grad students, 46% regular members; 13% senior members, 2.5% Fellows and the balance affiliate members. About two-thirds of our members are from North America and ~ one-third each are from Europe and Asia, with a small membership from Central and South America.

We currently have 31 Distinguished Lecturers who are available to provide talks at Chapters and other IEEE meetings or in some cases to universities or other groups. Check the NPSS web site https://ieee-npss.org/ to see who the DLs are and what lectures they offer. If you have questions about the program, contact Dan Fleetwood dan.fleetwood@vanderbilt.edu for more detail.

ADCOM ACTIONS

» The July 2018 Minutes were revised to show the creation of the Robert J. Barker Graduate Student Award for Excellence in Pulsed Power Applications. The award will be made annually and is funded through donations to the IEEE Foundation for this purpose.

» It was moved by the PPST Committee that AdCom approve their revised Constitution and Bylaws dated 2019-03-09. Passed.

» AdCom approves that NPSS will pay the $1000 Administrative Fee for Technical Cosponsorship of SCINT 2019. Passed.

» AdCom approves that NPSS will cover the $1,000 Administrative Fee for the Technical Cosponsorship of RADECS 2019. Passed.

» The Transnational Committee moves that ANIMMA become a financially sponsored conference of NPSS starting in 2021. Passed.

» The PPST Committee moves that NPSS technically cosponsors the 7th International Congress on Energy Fluxes and Radiation Effects (EFRE-2020) to be held in Tomsk, Russia, 20th–26th September 2020. Passed.

» That NPSS pays the $1,000 TCS administration fee. Passed.

» The PPST Committee moves that NPSS technically cosponsors the 2020 International High Voltage and Power Modulator Conference to be held in Knoxville, TN, 7-11 June, 2020. This is an IEEE conference so there is no cosponsorship fee. Passed.

» From FinCom: AdCom approves the policy of funding, for financially combined NPSS sponsored conferences, one WIE event, one YP event for the combined conference, and a set of Phelps grants and childcare support for each conference. Passed.

» AdCom approves the NPSS Nominations Committee consisting of the eight TC Chairs and the NPSS Nominations Committee Chair. Passed.

» The NPSS AdCom approves the motion from the Publications Committee that NPSS take the "Wait and See" option within the IEEE Accelerated Open Access program. Passed.

» The NPSS AdCom moves to support the National Council on Radiation Protection for an additional five years at up to $5,000/year. Passed.

» It was moved that NPSS create a liaison to the Nanotechnology Council (NTC). The liaison would be expected to attend one to two meetings of NTC a year as well as one AdCom meeting. The expenses for this liaison are not expected to exceed $4,500 per year. Passed.

AdCom approved two items between the Sydney, Australia meeting last November and the Nashville meeting: to approve Zane Bell of ORNL as the Editor-in-Chief of the IEEE *Transactions on Nuclear Science*, and to approve Ned Sauthoff as the Fellow Evaluation Committee Chair for 2019.

AdCom will hold its next meeting on the 29th June in Orlando, FL following the PPST conference.

Albe Larsen, IEEE NPSS Secretary and Newsletter Editor, can be reached by E-mail at a.m.larsen@ieee.org.

Technical Committees

ICISE conference center.

Martin Grossmann
CANPS TC Chair

TECHNICAL COMMITTEE REPORTS

Computer Applications in Nuclear and Plasma Sciences

A small delegation from CANPS visited the ICISE conference center in Quy Nhon, Vietnam, site of the Real Time Conference to be held from April 13th–17th, 2020. Our impressions of the center's state-of-the-art infrastructure, perfect fit for the size of Real Time, and the beautiful site confirmed that the decision for Quy Nhon was definitely a good one. Travel including transfer to a domestic flight in Ho Chi Minh City airport, and bus transfer to Quy Nhon proved to be efficient and should be handled easily by international participants. Besides: how many conference centers have their own private beach?! While we are finalizing details about the organization you are invited to start thinking now about a possible contribution – abstract submission deadline will be on December 16th 2019. {Photo: ICISE Conference Center, site of RT2020.]

This newsletter concludes the small series of articles by the winners of the 2018 CANPS Student Paper Award. Davide Pedretti, then at University and INFN Legnaro, Italy, presents a Timing System for the JUNO neutrino experiment.

Martin Grossmann, CANPS Chair, can be reached by E-mail at martin.grossmann@psi.ch.

FUSION TECHNOLOGY

A strong group of nominations was received for the 2019 Fusion Technology Award. The award winner is Dr.-Ing. Lutz Wegener, Head of the assembly division at the Wendelstein 7-X project, Max-Planck-Institut für Plasmaphysik, Greifswald, Germany. He is cited for outstanding technical contributions and leadership during the assembly of W7-X, as well as his collaboration on the assembly and integration of NCSX at Princeton and ITER in Cadarache.

The awards for 2018 (Dr. Larry R. Baylor) and 2019 (Dr.-Ing. Lutz Wegener) will be presented at the banquet during the 28th Symposium on Fusion Engineering (SOFE), to be convened June 2-6, 2019 at the Sawgrass Marriott in Ponte Vedra Beach, Florida.

Another important event that will take place at SOFE in June is a special Town Hall Meeting being organized by the American Physical Society (APS) Division of Plasma Physics (DPP) Community Planning Process (DPP-CPP). DPP-CPP is a strategic planning process with the goals of identifying scientific and technological opportunities in the fields of Plasma Physics and Fusion Energy Science, and making consensus recommendations for a strategy to address these opportunities to the DOE Office of Fusion Energy Science Advisory Committee (FESAC).

In his charge to the APS-DPP, the DOE Deputy Director for Science, Dr. Stephen Binkley, requests "that the Fusion Energy Sciences Advisory Committee (FESAC) undertake a new long-range strategic planning activity for the Fusion Energy Sciences (FES) program. The strategic planning activity—to encompass the entire FES research portfolio (namely, burning plasma science and discovery plasma science)—should identify and prioritize the research required to advance both the scientific foundation needed to develop a fusion energy source, as well as the broader FES mission to steward plasma science."

The FTC is pleased that SOFE has been chosen as a venue for this important Town Hall Meeting, validating its unique role as a forum for fusion technologists.

Charles Neumeyer
FTSC Chair

Charles Neumeyer, chair of the Fusion Technology TC, can be reached by E-mail at neumeyer@pppl.gov.

NUCLEAR MEDICAL AND IMAGING SCIENCE

As you read this newsletter the composition of the program for this year's 2019 IEEE NSS/MIC meeting at the Manchester Convention Centre in Manchester, UK is well underway. The meeting will take place from the 26th October – 2nd November. Paul Marsden (General Chair) along with Dimitri Darambara and Suleman Surti (MIC Program Chair and Deputy Program Chair, respectively) will be working on the abstract review with the aim of producing an exciting program for this latest edition of the meeting. Further details can be found on the conference website, https://nssmic.ieee.org/2019/.

It is also at this time of the year when we are searching to replace five NMISC committee members with new motivated volunteers to serve a three-year term starting from 1st January 2020. Self-nominations are encouraged. If you are interested in serving on the NMISC, please contact the NMISC Secretary, Emilie Roncali eroncali@ucdavis.edu.

Nominations are now being solicited for this year's NMISC Awards. This year, we have launched the Medical Imaging Technical Achievement Award, a new NMISC award. This award will be given annually to a mid-career individual who has made significant and innovative technical contributions in the field of medical imaging science. The award, consisting of $2,000, a certificate and a plaque, will be presented annually at the MIC from this year. At the time of nomination, a candidate for this award will have at least eight years, and no more than 25 years of professional experience and contributions in the field of medical imaging science after obtaining their highest degree. The award is open to all active members of the medical imaging community. We will also grant the Edward J. Hoffman Medical Imaging Scientist Award to an individual in recognition of outstanding contributions to the field of medical imaging science and the Bruce Hasegawa Young Investigator Medical Imaging Science Award to a young investigator in recognition of significant and/or innovative technical contributions made early in their career.

Jae Sung Lee
NMISC Chair

I would like to take this opportunity to encourage all of you to nominate worthy colleagues for these awards by the 15th of July deadline. All relevant information including the nomination form may be found on the NMISC website - http:// http://ieee-

npss.org/technical-committees/nuclear-medical-and-imaging-sciences/. Please send your nominations to the NMISC Awards & Nomination Subcommittee Chair, Paul Marsden paul.marsden@kcl.ac.uk, using the nomination form on the website.

Jae Sung Lee, Chair of the NMISC, can be reached by E-mail at jaes@snu.ac.kr.

PULSED POWER SCIENCE AND TECHNOLOGY

Susan Heidger
PPST Chair

Article VIII of the IEEE NPSS PPST Constitution states: "The Chair of the Committee shall appoint a subcommittee at least once each five years to evaluate the effectiveness of the C&BLs, to study rules of governance required by the activities of the Committee at that time and to propose amendments to C&BLs or to write a new C&BLs appropriate to the existing and anticipated needs of the Committee."

A review is required every 5 years and the current changes were approved by the over 2/3 of the voting Committee as "appropriate to the existing and anticipated needs of the Committee."

The changes are summarized here:

Article II—Field of Interest Section 2

» added "and system components" to pulse forming networks

» The section does state "including but not limited to", however at least one person felt strongly that this should be added and none of us objected

Article III—Membership Section 1

» The words "Members" and "Members-at-large" had been used interchangeably throughout both the Constitution and the Bylaws, this was cleaned up;

» It was also added that, explicitly, the previous PPC Chair and the E-i-C of TPS are members of the committee.

Article IV Administration Section 8

» Refers to PPST AdCom representatives

» Erroneously stated that the PPST Adcom representatives are elected "by the committee"; this was corrected to the "Pulsed Power Community". This is what actually happens;

» The Committee "nominates" at least 1.5 persons for a 4 year term as PPST AdCom reps.; the nominees are on the ballot and "elected by the Community"

Article V – Nomination & Election of Committee Members-at-Large Section 3

» This refers to filling a Committee vacancy when a Member-at-Large has not completed the full 4 year term. Currently the vacancy was left unfilled until the next regular election. In the future, the unexpired portion of the term will be filled "through appointment by the Chair and consent of the Committee."

» Purpose for change:

1) Committee did not want to leave a slot (or possibly more than one slot unfilled); and

2) We already elect 4 new members per year, having to get additional nominees could be problematic.

Article VI—Meetings Section 2

» Refers to what constitutes a quorum for conducting business of the Committee.

» Previously said simply Ten voting members constituted a quorum;

» Committee felt that general definition of a quorum should be used (50% +1 of voting members)

Article VII—Amendments Section 1

» Simply updated the new version and added the revision would become effective on the 1st day of the year following approval by IEEE (i.e. January 1, 2020).

Note that there are also changes to the Bylaws. Please see them below.

Susan Heidger, Chair of the PPST, can be reached by E-mail at slhalb@hotmail.com

YOU CAN BANK ON IT!

Don't marry for money. You can borrow it cheaper.

Scottish Proverb

Constitution And Bylaws of The Pulsed Power Science and Technology Committee of the IEEE Nuclear And Plasma Sciences Society

Color coded tracking of changes:

~~Deleted: Red and strikethrough—Original text that is recommended to be deleted~~
Blue: Recommended addition to the constitution and bylaws

Constitution And Bylaws of The Pulsed Power Science and Technology Committee of The IEEE Nuclear and Plasma Sciences Society

CONSTITUTION

Article I—Name and Object

Section 1. This organization shall be known as the Pulsed Power Science and Technology (PPST) Committee of the IEEE Nuclear and Plasma Sciences Society (NPSS), referred to hereafter as the Committee. This standing Technical Committee was formed in 1994 ~~and will complete its transition to an elected committee in 2019~~.

Section 2. The Committee shall strive for the advancement of pulsed power science, technology and its applications and for maintenance of high scientific and technical standards among the pulsed power community.

Section 3. The Committee shall aid in promoting cooperation and exchange of technical information among the pulsed power community. In particular, it will take responsibility for the following activities:

a. Organize and conduct the IEEE International Pulsed Power Conference (IEEE PPC) in a financially sound manner and encourage participation in the conference.

b. Publish the Digest of Technical Papers of the IEEE PPCs.

c. Recognize special achievements in the Pulsed Power community by presentation of the IEEE NPSS Pulsed Power Technical Committee Awards.

d. Encourage the Pulsed Power community to publish in the *Transactions ~~of~~ on Plasma Science~~s~~* by biennially sponsoring Special Issues on Pulsed Power, ~~and~~ by promoting publication in all monthly issues, and where~~.~~ ~~Where~~ appropriate, ~~we will also~~ encourage publication in other IEEE journals.

e. Encourage students to enter the Pulsed Power field.

f. Cosponsor other meetings and symposia that provide an opportunity to present results of pulsed power research, development, engineering and related applications, science or technology. It is expected that the Committee and NPSS will review and have approval authority over the budget of any conference for which co-sponsorship incurs financial responsibility.

g. Represent the Pulsed Power community interests in IEEE.

h. Act as a liaison between IEEE and other organizations in the area of pulsed power.

i. Promote IEEE and NPSS membership.

Article II – Field of Interest

Section 1. The field of interest of the pulsed power community represented by the Committee is the understanding, development and application of pulsed power to a variety of fields including but not limited to plasma physics, nuclear science, high power RF, and life sciences.

Section 2. The areas of technical activities shall include but are not limited to high power pulsed accelerators, pulsed power applications, pulse forming networks and system components, high power switching, pulsed electrical insulation and breakdown, electromagnetic energy storage, explosive pulsed power techniques, high current electron and ion diodes, intense particle beams and the associated diagnostics.

Article III—Membership

Section 1. The Pulsed Power Science and Technology Committee is ~~comprises~~ comprised of: Members-at-Large who are elected from members of NPSS ~~elected from~~ and the Pulsed Power Science and Technology Community~~,~~; the Chair of the Committee~~,~~; the Vice Chair of the Committee~~,~~; the chairs of the previous and next upcoming Pulsed Power Conference; the Editor-in-Chief of the *Transactions on Plasma Science*; and members appointed functions as specified herein and in the Bylaws. The number of elected Members-at-Large shall be 16 members. Only ~~elected members~~ Members-at-Large of the Committee, the Chair of the Committee, the Vice Chair of the Committee and the chair of the next upcoming Pulsed Power Conference are entitled to vote on Committee matters with the constraints as specified in Article IV – Section 3.

Section 2. The Committee will form functional subcommittees as required to conduct important aspects of Committee business. Functional subcommittees include, but are not limited to:

a. Secretariat (Secretary and Deputy Secretary)

b. NPSS Pulsed Power Technical Committee Awards Subcommittee (Erwin Marx Award, Peter Haas Pulsed Power Award, Arthur H. Guenther Pulsed Power Student Award)

c. IEEE Awards Subcommittee (identify and assist candidates for IEEE and NPSS awards)

d. IEEE Fellowship Subcommittee (identify and assist candidates for elevation to rank of IEEE Fellow)

e. Finance Subcommittee (oversight of conference finances, support of conference treasurers, solicitation of sponsorship)

f. Publications Subcommittee (includes Senior Editor of TPS for Pulsed Power Science and Technology, oversees conference publications, contributions to Newsletter in conjunction with Committee Chair)

g. Membership Subcommittee (recruits nominees to run for elected Member-at-Large, recruits new members of NPSS, supports promotion to Senior Member status)

h. Publicity (social media, webpage)

Subcommittee chairpersons and members holding functions are appointed by the Committee Chair. Members of the subcommittees are appointed by the subcommittee chairpersons with the approval of the Committee Chair. Special rules for the Pulsed Power Awards Subcommittee are described in the Bylaws.

Article IV – Administration

Section 1. The terms of office of the elected Members-at-Large shall be 4 years. Members-at-Large, elected to four-year terms, may not succeed themselves; however, such Members-at-Large may be candidates in the election held immediately after their term of service, for the term beginning a year after the expiration of their previous term. Election of Members-at-Large shall be held annually to fill vacancies for the coming year. The terms of office of the other members shall be specified in the Bylaws.

Section 2. The affairs of the Committee shall be managed by the Chair as directed by the PPST and in accordance with the powers and duties as defined hereunder and in the Bylaws. In the event of the Chair's absence or incapacity, these duties shall be performed by the Vice Chair as Acting Chair.

Section 3. The Chair or Acting Chair of the Committee shall refrain from voting in order to maintain impartiality. However, in the case of a tie vote the Chair shall cast the deciding vote.

Section 4.

a. The position of Chair shall be filled by succession of the Vice Chair, subject to the approval of the Committee, to serve a two-year term beginning 1 January of even numbered years. Also in even numbered years a Vice Chair shall be elected by the voting members of the Committee from among the elected members of the Committee to serve for two years. Following this two-year term, he or she will be the sole candidate in an election for Chair, as specified in the Bylaws. If he or she is not approved, the procedure specified in the Bylaws will be used to select the next Chair.

b. No individual may be elected as Vice Chair immediately after a term as Chair.

CONSTITUTION/BYLAWS Continued on PAGE 6

Constitution/Bylaws

Continued from PAGE 5

c. In the event that neither the Chair nor the Vice Chair is able to take office as prescribed in the Bylaws, or if both are incapacitated, or if both offices become vacant, the Committee shall promptly elect an Acting Chair from among the elected members to assume the duties of Chair until either the Chair or Vice Chair takes office or resumes his or her duties.

d. If the Vice Chair is unable to become Chair at the end of the two-year term, both the Vice Chair and Chair positions will be considered vacant. A new Chair and a new Vice Chair shall be elected by the voting members of the Committee from among the elected members. In this case, the Chair would serve two years ~~and then become the most recent Past Chair~~, and the Vice Chair would succeed to Chair as prescribed above.

e. If the position of Vice Chair is vacated at any other time during the two-year term, a replacement Vice Chair will be elected by the voting members of the Committee from among the elected members to complete the remainder of the term.

Section 5. The Chair of the Committee shall be a non-voting member of all subcommittees of the Committee.

Section 6. The Chair, as soon as expedient after election, shall appoint the chairpersons of the subcommittees provided for in the Bylaws. All appointees serve at the pleasure of the Chair.

Section 7. The Chair shall appoint a Secretary to serve for a two-year term. The Secretary shall organize committee meeting venues, take minutes, provide copies to the members, lead discussion of the minutes in all Committee meetings and maintain a file of the minutes of past meetings. The Secretary shall incorporate amendments to the PPST Constitution and Bylaws, distribute copies to the Committee members and maintain a file of past volumes (See Article VI - Section 1 and Section 2). The Chair shall appoint a Vice Secretary from among elected Committee Members to help with these duties and take over duties when the Secretary is unavailable.

Section 8. One or more members of the Committee, including previous members of the Committee, will be elected by the voting members of the Pulsed Power Community ~~Committee~~ to serve as NPSS AdCom members representing PPST. NPSS is managed by AdCom. NPSS AdCom will periodically determine the number of AdCom members that will represent PPST. These elected AdCom members and the PPST Chair will be voting members of AdCom. Together they will represent the interests of the Pulsed Power Community and the PPST to AdCom, NPSS and IEEE and convey IEEE and NPSS goals, policies and procedures back to the Committee and through the Committee to the Community. The person elected to this position will become a designated member of the Committee if not a ~~voting~~ member at the time elected as AdCom representative.

Article V—Nomination and Election of Committee Members-at-Large

Section 1. Nominating procedures shall be as prescribed in the Bylaws and shall include provision for nomination by Society members.

Section 2. Election of ~~the members-at-large~~ Members-at-Large of the Committee shall be as prescribed in the Bylaws.

Section 3. If a ~~member~~ Member-at-Large of the Committee does not complete a term, the vacancy shall be filled ~~at the next regular election~~ for the unexpired portion of the term through appointment by the Chair with the consent of the Committee.

Article VI—Meetings

Section 1. The Committee may hold meetings, conferences, symposia or conventions either alone or in cooperation with other organizations subject to applicable IEEE and NPSS rules and regulations.

Section 2. A quorum is necessary to conduct business of the Committee. A quorum is the majority of the entire voting membership. If the Committee has 18 or 19 voting members, then ten ~~Ten~~ voting members of the Committee ~~shall~~ constitute a quorum. Multiple offices or Committee assignments shall not entitle any member to more than one vote.

Section 3. A majority of the votes cast by those members of the Committee attending a Committee meeting shall be necessary for the conduct of its business except as otherwise provided in this Constitution.

Section 4. Business of the Committee may be handled by correspondence, telephone, facsimile, email or other means of communication where, in the opinion of the Chair, matters requiring prompt action can be adequately handled. A majority vote of the full Committee is required to take action in such a case. Actions that do not involve a written record are to be promptly confirmed in writing by the Chair.

Section 5. The Committee shall meet as required to conduct business and in accordance with the Bylaws.

Section 6. If the Chair is unable to represent the Committee at meetings of the NPSS Administrative Committee (AdCom), the Chair may designate the Vice Chair or the most recent Past Chair as his or her alternate. This alternate shall have the privilege of the floor on behalf of the Committee but will not have voting rights on matters coming before AdCom.

Article VII – Amendments

Section 1. Amendments to this Constitution may be made by a two-thirds vote of the Committee members. After such approval, the amendment shall be incorporated into the Constitution by the Secretary and the new version of the Constitution and Bylaws distributed to the Committee members. Amendments go into effect after approval by NPSS AdCom.

The original Constitution and Bylaws shall be Volume 1, dated September 19, 2000. The volume number and date shall be changed with each revision. This current revision shall be Volume ~~6~~7, dated ~~July 19, 2014~~ February 8, 2019 and shall go into force January 1, ~~2015~~2020.

Section 2. Bylaws and amendments thereto may be adopted by two-thirds vote of those voting members present at a Committee meeting. Alternatively a Bylaw or amendment may be adopted by a two-thirds mail or email vote of the members of Committee, provided that a fourteen day period is provided for such responses. After such approval, the amendment shall be incorporated into the Constitution by the Secretary and the new version of the Constitution and Bylaws distributed to the Committee members. Amendments go into effect after approval by NPSS AdCom. The original Constitution and Bylaws shall be Volume 1, dated September 19, 2000. The volume number and date shall be changed with each revision.

Article VIII – Revision

Section 1. The Chair of the Committee shall appoint a subcommittee at least once each five years to evaluate the effectiveness of Constitution and Bylaws, to study the rules of governance required by the activities of the Committee at that time, and to propose amendments to Constitution and Bylaws or to write a new Constitution and Bylaws appropriate to the existing and anticipated needs of the Committee.

BYLAWS

1. PPST Committee

1.1 Committee meetings will be called and organized by the Chair or by a majority of the members. The Committee shall meet at least twice a year. On odd numbered years a meeting should be held in conjunction with the IEEE International Pulsed Power Conference (IEEE PPC).

1.2 The Committee shall consist of a number of elected Members-at-Large plus designated other members as specified in Article III–Section 1 of the constitution. Members who are carrying out specific functions or activities are also expected to attend the Committee meetings as appointed members and members holding specific functions. These include the Editor of the *Transactions on Plasma Science*, the most recent Past Chair of the Committee, the chairpersons of the functional subcommittees, the chair of the most recent IEEE PPC, and the chair of the next IEEE PPC. In addition, chairs of IEEE PPCs to be held in the future are expected to attend at least one Committee meeting per year, in order to present a progress report on the preparations for their conferences.

1.3 If a Committee member misses two consecutive meetings, the Chair will contact the member and encourage participation or resignation. Missing further meetings are grounds for removal from the Committee ~~at the Chair's discretion.~~ by the Chair with the consent of the Committee.

1.4 The Committee shall organize functional subcommittees as required to conduct its business as outlined in Article III-Section 2 of the Constitution and in the following:

1.4.1. IEEE PPC Committees are formed to organize and manage each Pulsed Power Conference. Candidates for chair of each conference will be proposed by Committee members and elected by a majority vote of the Committee. The Conference Chair will select conference committee members and propose an IEEE PPC Technical Program Committee Chair to be approved by the Committee.

1.4.2. IEEE PPC Technical Program Committees are formed to organize and implement the technical program and publish the technical digest for the IEEE PPC. The IEEE PPC Technical Program Committee Chair shall organize, in coordination with the Conference Chair, a Program Committee. The Program Committee will solicit abstracts for Conference papers, review abstracts, select papers, organize the Conference technical program, invite plenary speakers, manage the technical program and publish the technical proceedings.

1.5 Each of the functional subcommittees shall submit a report of its activities to the Committee Chair prior to or at each meeting.

1.6 The terms of office of chairpersons of the functional subcommittees shall be two years.

2. Nomination and Election of PPST Members-at-Large

2.1 As specified in Article IV, the Committee shall include 16 voting ~~members~~ Members-at-Large, each serving a four-year term. ~~Posts, and any vacancies occurring in the previous year,~~ Four Member-at-Large positions are to be filled each year by election of the eligible membership of the Pulsed Power Community (see Article III–Section 1).

2.2 The Chair of the Committee is responsible for ensuring that at least one and one-half (1.5) nominations are obtained for each position to be filled. Nominations may be made by any member of the Committee or any member of the Community, up until a date fixed each year by the Chair of the Committee. That date shall be no later than ~~July 1~~ June 1, but may be extended if required. Self-nominations are permitted. It is recommended that a PPST community wide announcement for Members-at-Large nominations is sent out by March 1.

2.3 The individual making a nomination must determine in advance that the nominee is willing to serve if elected. A nomination is only valid if it is submitted in writing to the Chair or the Secretary of the Committee. The name, address, email address, and phone number of the nominee must be included, as well as a short biographical statement and a statement why the individual wishes to serve on the Committee. In addition, the nominee must be a member of NPSS, or provide a statement that an application for membership in NPSS has been submitted.

2.4 Those nominees receiving the highest number of votes will be elected. ~~Any vacancy on the Committee resulting from an uncompleted four-year term shall remain unfilled until the next regularly scheduled election. At that time, the remainder of the uncompleted term shall be filled by the nominee receiving the next highest number of votes total after determination of the regularly elected members.~~ In the event of a tie vote by the general membership of the Pulsed Power Community, the individual selected will be determined by a majority vote of the voting members of the Committee. The tiebreaking vote of the Committee members shall be conducted by fax or electronic mail by the Secretary of the Committee. ~~The Secretary shall endeavor to obtain the results as early as possible in advance of the Annual Meeting of the Committee~~. The Secretary of the Committee shall report the results to the Committee at their next regular meeting.

2.5 The Chair of the Committee shall arrange, before April 1, for a call for nominations to be conveyed to the whole membership through the NPSS Newsletter.

2.6 All nominees must be either members in any grade of IEEE and NPSS or must have submitted an application for membership in IEEE and NPSS at the time the nomination is forwarded to IEEE Headquarters. An affiliate member of NPSS is not eligible to be a nominee for ~~member-at-large~~ Member-at-Large.

2.7 The Chair of the Committee may fill any Member-at-Large vacancy by appointment for the remainder of the term with the majority approval of the Committee. Vacancies in Member-at-Large positions may occur due to resignation or removal from the Committee, or by a successful election of the next Vice Chair of the Committee. A Member-at-Large who is ~~elected~~ appointed to fill an uncompleted term is eligible for re-nomination to the Committee for a term beginning at the expiration of the partial term.

2.8 ~~The Secretary shall annually arrange for the distribution to the members of the Voting Community, on or about July 31, of a ballot to elect the candidates to fill member–at–large vacancies~~. The received nominations will be passed on to the IEEE NPSS AdCom Nominating Committee Chair in June, however no later than July 1st. The ballot shall be accompanied by a short biographical statement from each nominee.

2.9 ~~Ballots intended for all members of the Voting Community shall be prepared by the Secretary at the direction of the Chair.~~ The distribution and counting of ballots issued to all members of the Voting Community shall be entrusted to IEEE Headquarters. The Secretary of the Committee shall report the results to the Committee at their next regular meeting.

2.10 Forty-five days after distribution of the ballots, the IEEE Headquarters shall count and tabulate the votes received and report the results to the Secretary of the Committee, who, in turn, shall notify the Chair.

2.11 The Chair of the Committee shall submit to the Secretary of the NPSS AdCom the names of the candidates elected to fill the designated vacancies.

2.12 All terms of office of elected ~~members-at-large~~ Members-at-Large of the Executive Committee shall begin January 1 of the year immediately following their election.

3. Nomination of NPSS AdCom Members-at-Large representing the PPST Community

3.1. The Chair of the Committee is responsible for ensuring that at least one and one-half (1.5) nominations are obtained for each position to be filled. The nominee must be a current Member-at-Large of the Committee or a previous member of the Committee. Nominations may be made by any member of the Committee. Self-nominations are permitted. If more than two nominations are received for each position, then the Committee will down select the list to two candidates per position.

3.2. The received nominations or down selected list of candidates will be passed on to the IEEE NPSS AdCom Nominating Committee Chair in June, however no later than July 1st. The ballot shall be accompanied by a short biographical statement from each nominee.

43. Election of Chair and Vice Chair

43.1 The Chair of the Committee is elected by written ballot in odd-numbered years. The ballot will indicate two choices: 1) the current Vice Chair, and 2) an indication that an open election is desirable. The Secretary of the Committee shall send written ballots to all voting Committee members at least three weeks prior to the final meeting of the calendar year. The Chair shall designate tellers to verify and count the ballots during the meeting. Should the Vice Chair fail to receive a majority of the ballots cast, then the Committee will itself determine candidates for Chair from among elected members of the Committee and vote during the meeting. The term of office of Chair shall begin January 1 of the year immediately following the election.

43.2 The Vice Chair shall be nominated and elected from among the eligible elected members of the Committee. Nominations and seconds shall be solicited by the Chair prior to or during the final meeting of the calendar year in odd-numbered years. The Chair will accept nominations and seconds up to one month prior to the meeting. The slate of candidates for Vice Chair will appear on the same ballot as the election for Chair, and the same tabulation procedures shall be followed. After the election of the Chair, the vote for Vice Chair shall be announced and the nominee receiving a majority of votes cast shall be declared elected. In the event that no candidate receives a majority of the votes cast, runoff elections shall be conducted by secret ballot between the candidates receiving the two highest numbers of votes until one candidate receives a majority of the votes cast. The term of office of Vice Chair shall begin January 1 of the year immediately following the election. If the incoming Vice Chair holds a Member-at-Large position, he/she shall vacate that Member-at-Large position. The two-year term of Vice Chair is not constrained by a previously held Member-at-Large position.

54. IEEE International Pulsed Power Conference (IEEE PPC)

54.1 This Meeting is an official IEEE Nuclear and Plasma Science Society Conference that is conducted by the Committee in odd numbered years. This Conference is the main forum for exchange of information in pulsed power science, engineering, technology and applications of that technology. The IEEE PPC Committee and the IEEE PPC Technical Program Committee of each conference organize and manage the conference, plan and conduct the technical program and publish the digest of technical papers for the conference.

54.2 The digest of technical papers of each conference is made available to the attendees of the Conference.

54.3 The chairs of the IEEE PPC Committee and the IEEE PPC Technical Program Committee present their plans for their Conference to the Committee for review and approval. The budget for each conference is presented to the Committee for preliminary approval and to the NPSS President and Treasurer for final approval. The budget must follow IEEE and NPSS guidelines and be presented in the IEEE format.

65. Awards

65.1 The IEEE TAB has approved three NPSS Pulsed Power Technical Committee Awards for the Committee to administer. Each of these awards will be presented at the IEEE PPC if a suitable recipient is identified. These awards are the Erwin Marx Award, the Peter Haas Pulsed Power Award and the Arthur Guenther Outstanding Pulsed Power Student Award. To change an award or award criteria, PPST must petition NPSS AdCom and IEEE TAB through the NPSS Awards Chair. The IEEE TAB approved criteria for each award are as follows:

65.2. Erwin Marx Award: To recognize outstanding technical achievements in pulsed power engineering, science and technology by an individual over an extended period of time. Individuals who have made outstanding technical contributions to pulsed power technology for at least ten years are eligible.

65.2.1 Award administered by the NPSS with a cash award consistent with NPSS policy. A plaque is provided by the PPST Committee.

65.2.2 The Award is in consideration for outstanding technical accomplishments. The nominee is not required to be a member of the NPSS or IEEE but, where candidates have otherwise equal qualifications, preference shall be given to the candidate who is a member of the IEEE. Basis for Judgment is as follows:

a. Importance of the individual's technical contributions to pulsed power research, development or engineering. (50 percent)

b. Importance of technical contributions made by teams led by the candidate (20 percent)

c. Quality and significance of publications and patents (20 percent)

d. Technical distinction over an extended period of time (10 percent)

65.2.3 Nominations will be requested by email and in the NPSS Newsletters in June one year before the biennial award presentation. All nominations shall be due by December 1 prior to the IEEE PPC and selection will be made by the Awards Subcommittee and approved by the Committee (see Section 6.65.5) on or before March 1 prior to the IEEE PPC.

65.2.4 The biennial award will be presented in odd numbered years at the IEEE PPC Awards Banquet.

65.2.5 The presentation of the award will be featured in the NPSS Newsletter. The recipient will be a featured speaker at the Pulsed Power Conference. A picture of the recipient and an article describing the recipient's accomplishments will be in the foreword of the Digest of Technical Papers of the Pulsed Power Conference in which the award was received.

65.2.6 Unsuccessful nominations for the award will be automatically considered by the committee once for the following cycle pending the nominators consent and approval. An application that is unsuccessful for a second time will not be further considered unless it is resubmitted by the nominator as a new proposal. If nominations packages include personally identifiable information (PII), the committee should handle the PII appropriately according to IEEE policy.

65.3. Peter Haas Pulsed Power Award: To honor individuals whose efforts, over an extended period of time resulted in important the pulsed power programs and the growth of important areas of activity including research, education, applications and information exchange. Any individual who has demonstrated sustained contributions to developing, managing or influencing programs, education or information exchange that has led to important advances in the field of pulsed power is eligible.

65.3.1 Award administered by the NPSS with a cash award consistent with NPSS policy. A plaque is provided by the PPST Committee.

65.3.2 The Award will consider the total benefit conferred on pulsed power by the individual. The nominee is not required to be a member of the NPSS or IEEE but, where candidates have otherwise equal qualifications, preference shall be given to the candidate who is a member of the IEEE. Basis for Judgment (with relative weights) is as follows:

a. Importance of contributions to Pulsed Power through developing, managing or influencing programs, education, or information exchange. (40 percent)

b. Demonstrated leadership and service to the field of pulsed power. (30 percent)

c. Importance of the technical program contributions to pulsed power research or development. (20 percent)

d. Technical distinction in advancing or enlarging the field of pulsed power over an extended period of time (10 percent)

65.3.3. Nominations will be requested by email and in the NPSS Newsletters in June one year before the biennial award presentation. All nominations shall be due by December 1 prior to the IEEE PPC and selection will be made by the Awards Subcommittee and approved by the Committee (see Sec 6.65.5) on or before March 1 prior to the IEEE PPC.

65.3.4 The biennial award will be presented in odd numbered years at the IEEE PPC Awards Banquet.

65.3.5 The presentation of the award will be featured in the NPSS Newsletter. The recipient will be the featured speaker at the IEEE International Pulsed Power Conference. A picture of the recipient with an article describing the recipient's accomplishments will be in the foreword of the Digest of Technical Papers of the Pulsed Power Conference in which the award was received.

65.3.6 Unsuccessful nominations for the award will be automatically considered by the committee for the following cycle pending the nominators consent and approval. An application that is unsuccessful for a second time will not be further considered unless it is resubmitted by the nominator as a new proposal. If nominations packages include personally identifiable information (PII), the committee should handle the PII appropriately according to IEEE policy.

65.4 Arthur H. Guenther Outstanding Pulsed Power Student Award: To recognize outstanding contributions as a student in pulsed power engineering, science or technology. Candidates for this Award will be solicited annually and the selection process will be completed each year. Awards will be presented at the next IEEE PPC. Any full time undergraduate or graduate university student in pulsed power engineering or science is eligible. The nominee must be a student when nominated.

65.4.1 Award administered by the NPSS with a cash award consistent with NPSS policy. A plaque is provided by the PPST Committee.

65.4.2 Basis for Judgment—relative weights:

a. Quality of research contributions. (40 percent)

b. Quality of educational accomplishments. (30 percent)

c. Quality and significance of publications and patents. (30 percent)

65.4.3 Nominations will be requested by email and in the NPSS Newsletter each June. All nominations shall be due by December 1 prior to the IEEE PPC and selection will be made by the Awards Subcommittee and approved by the Committee (see Sec 6.65.5) on or before March 1 of every year.

65.4.4 Awards will be announced immediately following approval of the awardee and will be formally honored in odd numbered years at the IEEE PPC.

65.4.5 The presentation of the award will be featured in the NPSS Newsletter. The Award presentation will be described in the foreword of the Digest of Technical Papers of the Pulsed Power Conference in which he/she received the award.

6.5 IEEE NPSS Robert J Barker Graduate Student Award for Excellence in Pulsed Power Applications: To recognize and enable outstanding graduate students enrolled in an accredited MS or Ph.D. level research program in the field of nuclear and plasma sciences, in pulsed power applications with preference given to medical and environmental applications and to compact pulsed power research and applications. Candidates for this Award will be solicited by NPSS with the support of PPST annually, and the selection process will be completed each year. Awards will be presented at an IEEE NPSS Society Conference specified by the recipient, preferably at the IEEE Pulsed Power Conference.

6.5.1 Award administered by the NPSS with a cash award consistent with NPSS policy. A plaque is provided by NPSS.

6.5.2 Basis for Judgment—relative weights (consistent with NPSS award document):

a. Quality of research contributions. (40 percent)

b. Quality of educational accomplishments. (30 percent)

c. Quality and significance of publications and patents. (30 percent)

6.5.3 Nominations will be solicited by email to PPST members in support of the NPSS nomination call. All nominations shall be due January 31st of each year to NPSS or whichever date NPSS prescribes. The PPST Awards Subcommittee Chair will request nominations received from the NPSS Awards Chair on such due date (typically Jan 31st of each year).

6.5.4 A selection will be made one month after the nomination due date (typically by March 1) of each year and communicated at such time to the NPSS Awards Chair for approval by the NPSS Awards Committee.

6.5.5 Awards will be announced consistent with NPSS policy.

6.65.5 The next Awards Subcommittee Chairperson shall be appointed by the Chair of the Committee with the consent of the Committee. The Awards Subcommittee Chairperson should have served as a previous Committee Chair or previously received the Erwin Marx or Peter Haas Pulsed Power Awards. If such person cannot be identified, a current or past member of the Awards Subcommittee can be appointed as the next Awards Subcommittee Chairperson ~~elected by the Awards Subcommittee members from their own current membership~~. The Awards Subcommittee Chairperson and the members ~~Members~~ of the Awards Subcommittee will serve for two years. No Awards Subcommittee Chairperson or Awards Subcommittee member can serve more than two consecutive terms. The Awards Subcommittee Chairperson, in consultation with the Committee Chair, shall select an Awards Subcommittee comprised of at least 7 members and not more than 10 members. The Awards Subcommittee should be a diverse and balanced mix of members with different research experiences, different research interests and different international backgrounds. In addition to the Awards Subcommittee Chairperson, members should represent the following groups:

CONSTITUTION/BYLAWS Continued on PAGE 8

Constitution/Bylaws Continued from PAGE 7

a. at least 2 members should be previous Marx award or Haas award winners;

b. at least 2 members should be PPST Committee Members-at-Large ~~elected or voting members~~;

c. at least 2 members should be respected members of the Pulsed Power community who were not previous award winners and not current members of the PPST Committee.

d. The Awards Subcommittee should be a balanced committee representing the international community, academia, national laboratories and industry.

The Awards Subcommittee Chairperson will submit the proposed composition of the subcommittee to the Committee for approval. The Awards Subcommittee shall take office in the January following the IEEE PPC. The Awards Subcommittee Chairperson will ensure that the publicity for the Award is completed in a timely fashion. The announcement for the Award will identify the Awards Subcommittee Chairperson and request that nominations be mailed directly to the Awards Subcommittee Chairperson. The Chairperson will collate the nomination material, prepare a rating sheet for the subcommittee members to use in judging the nominees, and mail the material with instructions to all Awards Subcommittee members. Opportunities will be provided for the Awards Subcommittee members to discuss the selection process and answer questions about the nominees either in a meeting or by phone or email conference. Each Awards Subcommittee member will judge whether nominees meet the qualifications, rate each qualified nominee and provide the judging and rating information to the Awards Subcommittee Chairperson. The Chairperson will tabulate the ratings and the qualified nominees that have the highest point total will be finalists for the award and will notify the Awards Subcommittee members of the results of the voting and request comment. Discussion and voting will continue until at least a two thirds majority of the Subcommittee agrees on the recipient of the Award. The Awards Subcommittee Chairperson will notify the Chair of Committee of the results and request Committee approval. The Awards Subcommittee Chairperson and the members of the subcommittee will strive to complete the selection of awardees by the end of the calendar year preceding the Pulsed Power Conference. If a qualified candidate is not selected, the award will not be presented for that biennial period. The Committee Chair will secure a vote from the members of the Pulsed Power Science and Technology Committee on the motion either in one of the meetings of the Committee or by phone or mail vote. If the Committee approves the selection the Award will be presented at the next IEEE PPC. If they do not approve the selection for a given award, the award will not be presented for that biennial period. Multimodal image reconstruction algorithms in PET-MR imaging

RADIATION INSTRUMENTATION

Chiara Guazzoni
RISC Chair

The purpose of the Radiation Instrumentation Technical Committee (RITC) is to promote the development and application of radiation detectors, radiation instrumentation, nuclear electronics and measurement techniques for ionizing radiation and to serve the interests of people involved in the aforementioned activities. All IEEE NPSS members who have an interest in these topics are self-identified as RITC members. Therefore, it could very well be that you, who are now reading this newsletter, are a member of our technical community and it's the time to actively contribute to it.

The RITC is managed by the Radiation Instrumentation Steering Committee (RISC), which has 15 members-at-large elected from the general membership of the RITC. I started my term to serve as RISC Chair January 1st, 2019 for the term 2019-2020, helped by John Valentine (LBL, California, USA), elected RISC Vice Chair for the same term and Lorenzo Fabris (ORNL, Tennesee, USA) who is the Immediate Past Chair. Our secretary is Merry Keyser and more info on our Technical committee is available at https://ieee-npss.org/technical-committees/radiation-instrumentation/

Five people are elected to the RISC each year, and each person is elected to a three-year term. The deadline for nominations (or self/nominations) is June 1st. RITC member participation in the Committee activities is fundamental and strongly encouraged. Several ways of serving and participating are possible, from upgrading one's membership from standard member status to senior member status, to nominating deserving persons for the RISC Awards, to self-nominating as a candidate for the Member-At-Large position and by giving suggestions and contributions for scientific and educational activities beneficial to the RITC Community. In one word, we want you, yes, you who are reading now. Do not think you cannot contribute; your help is precious and needed.

The RISC, in conjunction with the Nuclear Medical wand Imaging Sciences Council (NMISC), oversees the annual Nuclear Science Symposium and Medical Imaging Conference. When reading this article, you should have already submitted your contributions to this year's edition that will take place from October 26th till November 2nd at the Manchester Convention Centre in Manchester (UK). You can read more on it in this issue of the newsletter. Paul Marsden (King's College, London, UK) Is the General Chair and Cinzia da Via (University of Manchester, UK) the NSS Program Chair, helped by Yoshinobu Unno (KEK, Japan), NSS Deputy Program Chair. We look forward to welcoming you all in Manchester!

Chiara Guazzoni is with Dipartimento di Elettronica, Informazione e Bioingegneria, Politecnico di Milano and with INFN – Sezione di Milano, Address: P.za Leonardo da Vinci, 32 – 20133 Milano – Italy, Phone: +39 02 2399 6147 – Fax: +39 02 2399 3699, E-mail: Chiara.Guazzoni@mi.infn.it

Functional Committees

AWARDS

John Verboncoeur
IEEE NPSS Awards Chair

One of the most enjoyable duties for volunteers in the IEEE Nuclear and Plasma Science Society is serving on the Awards Committee. The Awards Committee receives, solicits and reviews nominations for a number of awards spanning technical excellence to service, and recognizing superlative performance from early career to lifetime achievement. The Awards Committee was impressed with the quality of the nominees, and worked hard to determine the awards recipients among many strong nominations. The NPSS is grateful for the hard work and dedication of the Awards Committee in carrying out this important duty. We are equally grateful to the nominators for putting together the materials to showcase the achievements of their colleagues, the authors of support letters, and most of all the nominees, and regret that we can only honor a subset of nominees who clearly merit recognition.

Merit Award

This year's NPSS Merit Award recipient is Paul Lecoq. The Merit Award recognizes outstanding technical contributions to the fields of Nuclear and Plasma Sciences. It includes a plaque, a certificate, and a prize of $5,000.

Dr. Lecoq serves as an Invited Professor at CERN. Paul received the Master of Physics (1971) and the Diplôme d'Etudes Approfondies (1972) from the University of Grenoble, the Diplôme d'Ingénieur (1972) from L'Institut National Polytechnique, and the Master of Science in Physics (1973) and the Ph.D. in Physics (1974) from the University of Montreal.

Among Paul's notable achievements, his work on scintillators has effected transformative change in the approach to radiation detection. Driven by the unmet needs of the Large Hadron Collider (LHC), Paul led a team at CERN to develop the new scintillator materials to meet the LHC requirements for calorimetry, particularly the high interaction rates and challenging radiation environment.

Paul Lecoq
NPSS Merit Award recipient

Important achievements include leading the team that developed lead tungstate (PWO) scintillators for the Compact Muon Solenoid (CMS) experiment, including his role in optimization of the PWO material properties and organizing the large scale growth of PWO crystals. To understand the scale of the effort, the CMS calorimeter comprises over 75,000 PWO crystals of a little over 1 cm^3 each, totaling 100 tons mass. The CMS calorimeter played a key role in the discovery of the Higgs Boson, which led to the 2013 Nobel Prize in Physics. This component of his work alone has resulted in 38 papers related to PWO, whose impact is in part demonstrated by nearly 1,500 citations.

In addition to his roles in leadership and vision in translating the science into application, Dr. Lecoq had a key role in the fundamental science behind it. He assembled and led the team to move from an empirical trial and error model for scintillator materials, to a methodology anchored in fundamental understanding, translated through sound design principles, and engineered into complex devices. There are few who can span that range of expertise successfully. The methodology has resulted in transformation of scintillation science and engineering, leading to an order of magnitude increase in the knowledge generation rate on the scintillators, and consequently a similar acceleration of discovery and implementation of new scintillator materials.

Dr. Lecoq's work has impact in applications ranging from the aforementioned high energy accelerator physics, to medical imaging technologies including PET, X-ray CT, and planar X-ray, to oil-well logging, to hazardous materials detection, to dark matter science. His body of over 1,200 peer-reviewed publications, with over 120,000 citations and an h-index of 160 (Google Scholar) quantifies the major impact of his work.

Citation: For seminal contributions to the field of scintillation science, drawing on the disciplines of radiation detection and measurement, luminescence, solid state physics, and material science.

Richard F. Shea Distinguished Member Award

The 2019 recipient of the NPSS Richard F. Shea Award is Dr. Dimitris Visvikis, Director of Research of the National Institute of Health and Medical Sciences, Laboratoire du Traitement de l'Information Médicale. The Richard F. Shea Distinguished Member Award recognizes outstanding contributions through leadership and service to the NPSS and to the fields of Nuclear and Plasma Sciences. The award includes a plaque, a certificate, and a $5,000 prize.

Dr. Dimitris Visvikis
Richard F. Shea Award

Dr. Visvikis received his Ph.D. from the Institute of Cancer Research, Royal Marsden NHS Trust in 1996, and the Habilitation de diriger la recherché at the Universite Bretagne in 2009.

In leadership and service to the IEEE NPSS, Dr. Visvikis has served as Technical Committee Chair of the NPSS Nuclear Medical and Imaging Sciences Committee (NMISC) from 2014-2016. He served as Program Chair for the NPSS Medical Imaging Conference (MIC), 2016 NSS/MIC, Strasbourg, and many NPSS conference organizing committees in many roles over the last two decades.

Perhaps the most significant leadership and service role for Dr. Visvikis was in service to the NPSS in the development of the new NPSS journal held jointly with the IEEE Engineering in Medicine and Biology Society (EMBS), ***IEEE Transactions on Radiation and Plasma Medical Sciences*** (TRPMS), as well as serving as its inaugural Editor-in-Chief. TRPMS provides a unique venue for publication of original research related to radiation and plasma sciences applied to medicine. A particularly unique aspect of TRPMS is to enable dissemination of work in physics and engineering devices related to the topical area, including sources, detectors, systems, and their applications in medicine. As TRPMS continues to move toward indexing in PubMed, this also provides

a crucial connection between the development of the science and engineering, and the clinical audience crucial to the translation into practice. The journal is now in its third year, and demonstrating strong performance in attracting quality articles, vetted by a quality editorial team built by Dr. Visvikis, with strong and sustainable editorial policies and practices in place ensuring it will continue to thrive.

Citation: For contributions to and leadership in the IEEE Nuclear and Plasma Sciences Society and the medical sciences community for the establishment of the new NPSS/EMBS journal "IEEE Transactions on Radiation and Plasma Medical Sciences" and for serving as its first Editor-in-Chief.

Early Achievement Award

The 2019 recipient of the IEEE NPSS Early Achievement Award is Matthew Gomez, Principal Member of Technical Staff, Sandia National Laboratories. The Early Achievement Award recognizes outstanding contributions to any of the fields of Nuclear and Plasma Sciences during the first ten years of an individual's career. The award comprises a plaque, a certificate, and a $3,000 prize.

Matthew Gomez
Early Achievement Award

Dr. Gomez received his Ph.D. in Nuclear Engineering from the University of Michigan in 2011. He subsequently held a number of positions at Sandia National Laboratories, including Senior Member of Technical Staff (2011-2016), Acting Manager of Radiation and Fusion Experiments Department (2016), and Principal Member of Technical Staff (2016-present).

Dr. Gomez leads a team focused on major new physics discoveries in high-energy-density physics, including inertial-confinement fusion, z-pinch X-ray sources, and power flow. He has led over 100 experiments at the Z facility, about half on the new Magnetized Liner Inertial Fusion (MagLIF) concept. The inertial confinement area is currently undergoing a transformation, in which MagLIF is one of the three leading efforts to attain parameter regimes approaching fusion within NNSA. The area has grown in importance and now has dedicated sessions at major conferences, including a magneto-inertial confinement miniconference at the 2018 APS Division of Plasma Physics meeting, and a dedicated session at the 2017 IEEE ICOPS. About ten universitylaboratories have now started programs in this space.

Dr. Gomez's early publication on the first MagLIF experiments has accumulated over 130 citations since 2014 (M. R. Gomez, S. A. Slutz, A. B. Sefkow et al., "Experimental demonstration of fusion-relevant conditions in magnetized-liner inertial fusion, *Phys. Rev. Lett.* 113, 155003 (2014)). His pioneering research on the MagLIF program has been reported to broader audiences through Discover Magazine, Physics Viewpoint, Physics World, and Nature News. Overall, the MagLIF component of his research portfolio is demonstrating substantial impact through over 160 citations over 4 years.

Additional, Dr. Gomez has made substantial contributions in the area of power flow in Z, developing a method to monitor plasma formation in the power flow region and correlating that to power loss. This work led to mitigation of power loss, with improved current coupling resulting in record neutron production. His ongoing efforts to address gaps in understanding of the magnetically insulated transmission line (MITL) and convolute regions are a crucial step to developing the next generation of pulsed-power drivers, upon which high-energy-density science depends.

Dr. Gomez has authored or co-authored over 50 publications, with about 700 total citations and an h-index of 13. He is seen as one of the top scientists in the world in his experience group by the senior scientists in the area, both technically and in terms of leadership potential.

Citation: ***For contributions to magnetically-driven high energy density science and leadership of the experimental demonstration of a magneto-inertial fusion concept with the possibility of scaling to ignition.***

Charles K. Birdsall Award

The 2019 recipient of the IEEE NPSS Charles K. Birdsall Award is Ahmed Hassanein, Paul L. Wattelet Chair & Distinguished Professor of Nuclear Engineering, Purdue University. The Birdsall Award recognizes outstanding contributions in computational nuclear and plasma sciences. It comprises a plaque and a $2,000 prize.

Dr. Hassanein received the Ph.D. in Nuclear Engineering from the University of Wisconsin, Madison, in 1982. He has served in a number of positions at Argonne National Laboratory, culminating in a term (2000-2007) as Director of the Argonne National Laboratory Fusion Power Program. Subsequently, he was appointed Professor of Nuclear Engineering at Purdue University, where he quickly became Director of the Center for Materials Under eXtreme Environoment (CMUXE, 2008-present). He also served as the Head of the Nuclear Engineering Department (2009-2015) at Purdue University.

Ahmed Hassanein
Charles K. Birdsall Award

Dr. Hassanein is among the top experts in computational nuclear and plasma sciences in the world. He has developed cutting edge tools, including the High Energy Interaction with General Heterogeneous Target Systems (HEIGHTS) package for the simulation of power deposition by intense laser, plasma, and particle beam sources on target materials is a key achievement. HEIGHTS combines diverse multiphysics models including energy deposition, target vapor and plasma formation and transport, magnetohydrodynamic processes, thermal transport, atomic physics, radiation transport, all in the presence of intense electric and magnetic fields.

In addition to the convergence of multiphysics models, Dr. Hassanein's work addresses the numerical challenges that arise with disparate time and space scales and multiphysics. His work incorporates both innovation in algorithms, and validation to ensure convergence and fidelity. His methods include both Lagrangian and Eulerian treatments, often competitively, for example in computing multispectral radiation transport via Monte Carlo methods or via continuum and lines transport.

Applications of Dr. Hassanein's work include magnetic fusion energy, inertial fusion energy, discharge- and laser-produced plasma sources for extreme ultraviolet lithography, laser-induced breakdown spectroscopy, with applications in high power accelerators and national security.

His most significant contribution is in modeling the effects of high-power plasma instabilities on the first-wall materials in tokamak magnetic fusion configurations such as ITER. These high-power events represent one of the most challenging obstacles to achieving a burning plasma power source. His leadership-class computing multiphysics 3D models led to revelations of design concerns in the complicated geometry of the facing components in the $26B ITER experiment, attracting substantial attention to mitigation.

At the other end of the physical length scale, Dr. Hassanein is also an internationally recognized leader in nanolithography. He and his team have developed methods for modeling extreme ultraviolet lithography sources as tools for engineering the next generation of computer chips. This work leveraged his modeling capabilities for materials interface with high-energy plasmas developed in his magnetic fusion facing component efforts. This work has contributed substantially to the science and engineering of lithography target materials and their optimization. Indeed, his work predicted the failure of dense plasma focus devices funded by the semiconductor industry for next-generation nanolithography, resulting in termination of the effort funded by one of the largest global semiconductor companies.

In the spirit of the Award's namesake, Charles "Ned" Birdsall, Dr. Hassanein has maintained a focus on student mentoring throughout his career. That continues unabated, with 14 Ph.D. and eight M.S. students graduated in the last eight years, remarkably including his tenure as Department Head. In the same time interval, he also was recognized as Best Teacher (2012). His innovation and productivity is reflected in his portfolio of more than 500 publications, with nearly 5,000 citations and an h-index of 29, as well as four patents granted and three more pending. He was elected Fellow of seven societies, including IEEE, SPIE, AAAS, ANS, OSA, APS, and IOP.

Citation: For contributions to recent innovation in computational plasma physics for applications to magnetic fusion in full 3D simulation of plasma evolution during transient events in ITER Tokamak device.

Magne "Kris" Kristiansen Award

The 2019 recipient of the inaugural IEEE Magne "Kris" Kristiansen Award is Edl Schamiloglu, Distinguished Professor of Electrical and Computer Engineering and Associate Dean for Research and Innovation, School of Engineering, University of New Mexico. The Kristiansen Award recognizes individuals for outstanding contributions in experimental nuclear and plasma science with preference given to areas within the broadest scope of plasma sciences encompassing the generation of strong pulsed electromagnetic fields including their interaction with plasmas and other pulsed power applications. The award comprises a plaque and a $2,000 prize.

Dr. Schamiloglu received his Ph.D. from Cornell University in 1988. Subsequently, he held a series of faculty appointments in Electrical and Computer

Edl Schamiloglu
"Kris" Kristiansen Award

Engineering (ECE) at the University of New Mexico (UNM), becoming Associate Chair and Director of the Graduate Program (2000-2001), Garner-Zemke Professor (2000-present), and Distinguished Professor of ECE (2014-present, the highest title bestowed on faculty members at UNM). From 2015-2017, he served as Director of COSMIAC, the School of Engineering Center focused on aerospace research. In 2017, he was appointed Associate Dean for Research and Innovation for the School of Engineering, to which he added Special Assistant to the Provost for Laboratory Relations as the liaison to the National Laboratories in 2018.

Dr. Schamiloglu has made significant contributions to a number of areas spanning experimental high-power microwaves (HPM), pulsed power, and plasma physics. He is widely viewed as one of the top HPM researchers in the U.S., with a number of key accomplishments to his credit.

In his early work in 1996, Edl and coworkers provided the experimental data needed to determine that the grid noise damping mechanism in a PIC code simulation of the UNM Backward Wave Oscillator (BWO) was also filtering the physics of the beam-wave interaction. This led to development of the first predictive model for an HPM source ([L.D. Moreland, E. Schamiloglu, R.W. Lemke, A.M. Roitman, S.D. Korovin, and V.V. Rostov, "Enhanced Frequency Agility of High Power Relativistic Backward Wave Oscillators, IEEE *Trans. Plasma Sci.*, 25: 852-858 (1996).

Dr. Schamiloglu was among the first to note breakdown limitations in HPM output, which manifested as plasma rings around the output antenna observed to increase in strength with increasing beam voltage, while output power decreased ([E. Schamiloglu, R. Jordan, M.D. Haworth, L.D. Moreland, I.V. Pegel, and A.M. Roitman, "High Power Microwave-Induced TM01 Plasma Ring," *IEEE Trans. Plasma Sci.*, 24:6-7 (1996)). This in part supported the case for two decades of high power microwave breakdown work seeking to mitigate this limitation. In another example of pioneering work, Dr. Schamiloglu was the first to propose the use of in-situ laser interferometry to diagnose surface plasma formation due to the HPM increasing start current conditions of the oscillator as the cause of pulse shortening ([C.T. Abdallah, V.S. Soualian, and E. Schamiloglu, "Towards Smart Tubes Using Iterative Learning Control," *IEEE Trans. Plasma Sci.*, 26:905-911 (1998)).

Innovations of Dr. Schamiloglu and coworkers include the transparent cathode-driven relativistic magnetron, demonstrating an output efficiency increase from 25% to 50% ([M.I. Fuks and E. Schamiloglu, "Rapid Start of Oscillations in a Magnetron with a Transparent Cathode," *Phys. Rev. Lett.*, 95:205101-1-4 (2005))., and subsequently to 70% in a magnetron with diffraction output (M.I. Fuks and E. Schamiloglu, "70% Efficient Relativistic Magnetron with Axial Extraction of Radiation Through a Horn Antenna," *IEEE Trans. Plasma Sci.*, 38: 1302-1312 (2010)). He subsequently replaced the cathode with a virtual cathode injected electron beam, resulting in mitigation of pulse shortening (M.I. Fuks, S. Prasad, and E. Schamiloglu, "Efficient Magnetron with a Virtual Cathode," *IEEE Trans. Plasma Sci. Special Issue on High Power Microwave Generation*, 44:1298-1302 (2016)). He subsequently eliminated axial leakage current by employing the classic magnetic mirror effect, resulting in a record 92% efficiency ([M.I. Fuks and E. Schamiloglu, "Application of a Magnetic Mirror to Increase Total Efficiency in Relativistic Magnetrons," submitted to *Phys. Rev. Lett.* (2018)).

Dr. Schamiloglu's productivity includes a total of $43.5M in total external research and equipment expenditures, as well as coauthorship of six key books including seminal books on high-power microwaves, and 150 refereed journal articles. The impact of Dr. Schamiloglu's work can be measured by over 6,300 citations, and an h-index of 35.

Citation: ***For contributions to pulsed-power-driven high power microwave source research and the interaction of strong pulsed electromagnetic fields with plasmas both internal to and external to these sources.***

FUNCTIONAL COMMITTEESS
Continued on PAGE 10

Functional Committees

Continued from PAGE 9

Glenn F. Knoll Graduate Education Grant

Jun Yeol Won
Glenn F. Knoll Graduate Education Grant

The recipient of the 2019 Glenn F. Knoll Graduate Education Grant is Jun Yeol Won, of Seoul National University. This grant recognizes outstanding graduate students in the fields of nuclear science instrumentation, medical instrumentation, or instrumentation for security applications. The grant is intended to support travel and attendance to conferences, workshops or summer schools, or special research projects. It includes a plaque and a $5,000 grant.

Mr. Won graduated from the School of Electrical and Computer Engineering at Seoul National University, and is now working toward the Ph.D. in the Department of Biomedical Sciences at Seoul National University. He has been studying Instrumentation in Nuclear Medicine for six years. He has published seven journal articles, and nine international conference papers, and holds five patents,

Mr. Won's research is on precision FPGA-based time to digital convertors, with applications to PET data acquisition and signal multiplexing. His work is already having an impact, with his multichannel time-to-digital convertor and comparator-free data acquisition system now a core component of a time-of-flight PET scanner and MRI compatible brain PET inserts.

Ronald J. Jaszczak Graduate Award

Min Sun Lee
Ronald J. Jaszczak Award

The recipient of the 2019 Ronald J. Jaszczak Award is Min Sun Lee of Stanford University. The Jaszczak Award recognizes and enables an outstanding graduate student enrolled in an accredited Ph.D. curriculum, Post-doctoral Fellow or Ph.D. level Research Associate in the field of nuclear and medical imaging sciences to advance his/her research activities. The award includes a prize of up to $5,000 to support academic and/or research activities.

Dr. Lee received her Ph.D. at Seoul National University in 2018 for investigating PET detector physics, and design, construction, and characterization of detector performance. She received her B.S. in Nuclear Engineering at Seoul National University in 2012. She is now a postdoctoral researcher in the Department of Radiology at Stanford University.

She developed improvements in the three-dimensional positioning accuracy of PET detectors in her Ph.D. research. Her novel triangular reflector arrays enabled cost-effective depth of interaction PET detectors. More recently, she proposed an innovative intercrystal scatter event identification algorithm, which was selected as the finalist in the student competition at the 2017 IEEE NSS/MIC Conference. Another innovation was a novel personal dosimetry technique resulting in significantly reduced dose calculation time.

Her work is represented in 14 refereed journal publications, and one patent.

NPSS Graduate Scholarship Awards

The recipients of the 2019 NPSS Graduate Scholarship Award are Daniel Diedda of Leeds University and Samuel Cope of North Caroline State University. The Graduate Scholarship Award recognizes contributions to the fields of Nuclear and Plasma Sciences by a graduate student in the fields of Nuclear and Plasma Sciences. The scholarship includes a certificate, one year paid membership in the NPSS, and $1,500 prize.

Daniel Diedda
2019 NPSS Graduate Scholarship Award

Mr. Diedda was awarded the B.S. in Physics, and the M.S. in Applied Physics at the University of Cagliari, and is currently working toward the Ph.D. in Biomedical Imaging at the University of Leeds studying uncertainty quantification in PET/CT and SPECT/CT. His Ph.D. project is "Quantitative PET-MR Image Reconstruction at Ultra Low Radioactive Doses." He has contributed several algorithms to the open source STIR library, including an implementation of the hybrid and standard kernel method, the PLS prior reconstruction, and the list mode reconstruction. He performed an internship at the Nuclear Medicine Ward at Brotzu Hospital Cagliari in 2011, and a research project in hadron therapy at the LNS-INFN Catania, Italy.

Samuel Cope
2019 NPSS Graduate Scholarship Award

Mr. Cope was awarded the B.S. in Nuclear Engineering (2016) and M.N.E. (2017) at North Carolina State University (NCSU), and is currently completing the final year for the Ph.D. in Nuclear Engineering at NCSU. His research is in radiation safety and nuclear emergency response, primarily focusing on transuranic, including activity analysis in air samples, and rapid discrimination of anthropogenic from transuranic in air samples. He has worked with field deployable detection suites including PIPS, high-purity germanium, and dual phoswich detectors with liquid scintillation spectroscopy. In 2018, he interned at Oak Ridge National Laboratory working on nonproliferation.

NPSS Women in Engineering Leadership Grant

The 2019 recipient of the NPSS Women in Engineering Leadership Grant is Marquidia Pacheco of the National Institute of Nuclear Research, Mexico. The Women in Engineering Leadership Grant provides leading-edge professional development for women in midlevel to senior phases of their careers. The recipient receives a certificate and reimbursement of expenses to travel to and participate in the IEEE Women in Engineering International Leadership Conference, up to a maximum of $3,000.

Marquidia Pacheco
NPSS Women in Engineering Leadership Grant

Dr. Pacheco received her Ph.D. in Physics and Engineering of Plasmas from the Centre de Physique des Plasmas et leurs Applications de Toulouse (now LAPLACE) in 2003. She held a series of positions at the Instituto Nacional de investigaciones Nucleares (ININ), and is currently the Project Manager and Supervisor of Engineering and Postgraduate Students. Her contributions to plasma physics include treatment of industrial waste, mitigation of vehicle and industrial exhaust pollutants, and high-density energy storage including supercapacitors. Her work includes six book chapters, 47 journal articles, and 143 conference papers. She holds three patents.

She has mentored two female students who won distinctions of ***Young Special Prize Techno Sciences 2009*** for the project "Synthesis of carbon nanostructures for use as adsorbents during NO_x degradation by plasma" and ***Young Inventors and Innovators of the State of Mexico 2011*** for the project "Doped Membranes with Carbon Nanostructures employing magnetron sputtering technique for Environmental Use in the Treatment of Water and Air Pollutants." In 2011, she co-organized the national forum, Women in Science, Technology and Innovation in Mexico. She also founded ***Sembrando Con Ciencias*** (Seeding with Sciences) movement to do science outreach to young people, primarily girls.

Conclusion

The presentation of awards at NPSS conferences is a time for the community to come together to celebrate excellence, and to recognize those who have moved NPSS forward. Join us in saluting these achievements! After congratulating this year's award recipients, it is time to think about nominating your deserving colleagues for next year. You can learn more about NPSS Awards, eligibility, and the nominations process at https://ieee-npss.org/awards/npss-awards/.

John Verboncoeur, NPSS Awards Committee Chair, can be reached via johnv@msu.edu.

2019 PULSED POWER SCIENCE AND TECHNOLOGY AWARDS

Bryan Oliver
PPS&T Awards Chair

Erwin Marx Award

Alexander Kim
Erwin Marx Award

The 2019 Erwin Marx Award winner is Dr. Alexander (Sasha) Kim of the High Current Electronics Institute in Tomsk, Russia. The Erwin Marx Award recognizes outstanding contributions to pulsed power technology by an individual over an extended period of time. Dr. Kim was born and lives in the Siberian city of Tomsk, Russia. He attended the Moscow Engineering Physics Institute and graduated with honors in 1977. He then returned to Tomsk and joined Sergey Bugaev's E-Beam Laboratory at the Institute of High Current Electronics (IHCE) where he worked to increase the pulse length of e-beams generated with coaxial magnetically immersed foilless diodes. In 1989 Boris Kovalchuk invited him to join his group developing microsecond plasma opening switches, with the intended goal to increase the output power of drivers which have as a prime energy source Marx generators and intermediate inductive power amplification stages. Instead, he, along with colleagues, invented the fast Linear Transformer Driver (LTD), eliminating completely the need for power amplification. More recently the LTD technology has been further developed to generate output pulses of trapezoidal shape with very fast rise time (<10 ns) and flat top, named "Square Pulse LTDs." This new technology which replaces the sinusoidal pulse output of the standard LTD, is ideally suited for applications such as flash radiography, Z-pinch drivers, and high-power microwave drivers. Many aspects of the LTD technology are being further advanced in close and fruitful collaborations with researchers in the USA, France, Israel and China. Alexander Kim earned a doctoral degree in Technical Sciences from IHCE in 2002. At present he is the Leading Scientist of the IHCE Pulsed Power Department.

Dr. Kim is recognized for his pioneering work in the science and technology development of high-power Linear Transformer Driver (LTD) accelerator architectures.

Peter Haas Award

Thomas Melhorn
Peter Haas Award

The 2019 Peter Haas Award winner is Dr. Thomas Mehlhorn of the Naval Research Laboratory, Washington DC, USA. The Peter Haas Award recognizes any individual who has demonstrated sustained contributions to developing, managing or influencing programs, education or information exchange that has led to important advances in the field of pulsed power.

Dr. Thomas A Mehlhorn is the Superintendent of the Plasma Physics Division at the Naval Research Laboratory (NRL) and a member of the Department of the Navy (DoN) Senior Executive Service (SES). He earned his Bachelor of Science, Master of Science and Ph.D. in Nuclear Engineering from the University of Michigan in 1974, 1976 and 1978, respectively. He began his career as a member of technical staff in the Plasma Theory Department at Sandia National Laboratories in Albuquerque,

New Mexico (1978-1988). His 1981 paper "A Finite Material Temperature Model for Ion Energy Deposition in Ion-Driven Inertial Confinement Fusion-Targets" has been cited 187 times and his model was validated by experiments on Gamble II at NRL and on Proto I at Sandia. He developed ITS 1.0 (Integrated Tiger Series of Electron-Photon Monte Carlo Transport Codes) and was the chief theorist for ion diode experiments on both PBFA-I and PBFA-II. He became a department manager in 1989 and developed an ion beam focusing simulation code (PICDIAG) that was used to design experiments that reached a record proton beam intensity (5 TW/cm^2, 38 eV hohlraum). From 1992-1995 he led a team to achieve a record lithium beam intensity of 2 TW/cm^2 and hohlraum temperature of 65 eV. His dynamic hohlraum ICF team won a Lockheed Martin NOVA award in 2004 for thermonuclear neutrons on Z. He became a senior manager in 2006 and led the development of a 3-D radiation-MHD code (ALEGRA), hybrid kinetic-fluid plasma codes, and QMD/DFT ab initio material modeling; dynamic material and shock physics programs; advanced radiographic source development; and managed Nevada Programs, including the Cygnus radiographic source. He joined NRL in 2009 and is responsible for a broad spectrum of research programs in plasma physics, laboratory discharge and space plasmas, intense electron and ion beams and photon sources, atomic physics, pulsed-power sources, radiation hydrodynamics, high-power microwaves, laser physics, advanced spectral diagnostics, and nonlinear systems.

Dr. Mehlhorn is recognized for his leadership in the areas of pulsed-power-enabled plasma and Xray radiation physics.

Arthur Guenther Student Award

Christine Stollberg
Art Guenter Award

The 2019 Arthur Guenther Student Award winner is Ms. Christine Stollberg of the Weizmann Institute of Science, Rehovot, Israel . The Arthur Guenther Student Award recognizes outstanding students in the field of pulsed power by identifying their unique achievements in the field of pulsed power science, engineering and technology development.

Ms. Stolberg received her Diplom (equiv. to M.Sc) in Physics from the University of Jena, Germany in 2011. Her thesis for her Diplom was on the "Investigation of a z-pinch plasma as a waveguide for laser wakefield acceleration". She is presently a PhD student at the Weizmann Institute of Science, working under Prof. Yitzhak Maron, on "Investigations of small scale compressing plasma column". Her interests are in fundamental phenomena in plasmas, especially Z-pinch plasmas, high intensity laser-matter interactions, and laser particle acceleration in plasmas. She has served as a mentor to students in the International Summer Science Institute at the Weizmann and has been honored with the Outstanding Female Scientist Award of the Israeli Vacuum Society (2017), the Samuel Goldsmith Award for the best student presentation of the Israel Plasma Science and Technology Association (2012) and the Student prize for the best thesis at the institute of Optics and Quantum Electronics (2011)

Ms. Stollberg is being recognized for her contributions in diagnosing pulsed power driven Z-pinch plasmas.

All three awards will be presented at the 2019 Pulsed Power Plasma Science Conference in Orlando, Florida (USA), June 23rd–28th, 2019.

Dr. Bryan Oliver, PPS&T Award Committee Chair, can be reached by E-mail at: b.v.oliver@ieee.org or by Phone: +1 505 284-7868.

2019 RADIATION INSTRUMENTATION AWARDS

Call for Nominations

In the March issue of the Newsletter you had the chance to read a report on the 2018 activities of the RISC Honors and Awards Subcommittee and on the RITC award ceremony held on Monday November 12th, 2018 during the opening ceremony of the 2018 Nuclear Science Symposium, in Sydney (Australia).

It is now time to nominate a deserving colleague (early career, midcareer or senior) for the three prestigious awards that RISC will award in 2019: the Radiation Instrumentation Early Career Award (RIECA), the Emilio Gatti Radiation Instrumentation Technical Achievement Award (RITAA) – second edition but prize awarded in 2018 – and the Glenn F. Knoll Radiation Instrumentation Outstanding Achievement Award (RIOAA). The deadline for 2019 will be July 15th, as usual. Before submitting a nomination, please consider that these are awards (prize in recognition of something that has been achieved) and not grants (financial support in view of some need). Grants to attend the 2019 IEEE Nuclear Science Symposium and Medical Imaging Conference in Manchester are available and the call is published on the conference website https://nssmic.ieee.org/2019/grants-awards-copy/.

The Radiation Instrumentation Early Career Award is given to a young investigator within ten years of the highest degree received, in recognition of significant and innovative technical contributions to the fields of radiation instrumentation and measurement techniques for ionizing radiation. The prize consists of US$1,500 and an engraved plaque. The past recipients of the RIECA can be found on the Radiation Instrumentation Technical Committee (RITC) web page http://ieee-npss.org/technical-committees/radiation-instrumentation/.

Chiara Guazzoni
RISC Chair

The new Emilio Gatti Radiation Instrumentation Technical Achievement Award – introduced in 2018 - recognizes a midcareer individual who has made significant and innovative technical contributions in the field of radiation detectors, radiation instrumentation, and/or nuclear electronics, and/or measurement techniques for ionizing radiation over a minimum of ten years. The prize consists of US$2,000 and an engraved plaque.

The prestigious Glenn F. Knoll Radiation Instrumentation Outstanding Achievement Award is given to an individual in recognition of outstanding and enduring contributions to the field of radiation instrumentation. The prize consists of $3,000 and an engraved plaque. The past recipients of the RIOAA can be found on the RITC web page http://ieee-npss.org/technical-committees/radiation-instrumentation/.

Starting from 2019 the Award Subcommittee chair is Paul Lecoq from CERN and the Committees for the 2019 edition of the aforementioned awards are being formed and will be published on the RITC web page http://ieee-npss.org/technical-committees/radiation-instrumentation/.

Revised nomination packets are available in .doc and .pdf formats on the RITC webpage http://ieee-npss.org/technical-committees/radiation-instrumentation/ and the completed packets should be submitted in pdf format via email to the Award Subcommittee Chair Paul Lecoq Paul.Lecoq@cern.ch. The nominator should provide the information requested on the nomination form. Please do not submit materials beyond those requested.

Please note that the IEEE Policy on Award Limitations states "Normally, an individual shall receive only one honor in recognition of a given achievement, unless the significance of the achievement is such as to merit subsequently a higher award. A higher award may be given in the following year or thereafter." In the hierarchy of NPSS awards, IEEE level awards are considered higher than NPSS Society level awards, which are considered higher than NPSS Conference level awards. Technical Committee awards with a prize amount greater than US$2,000 are considered Society level awards. If an individual being nominated for any of our NPSS awards has already received any type of IEEE award for the same or similar work, the nominator must explain why the achievement for which the individual is being nominated is significantly different than that for which the previous award was given. A section dedicated to possible previous IEEE awards received by the nominee has been added in the nomination packet.

Paul Lecoq
RISC Awards Subcommittee Chair

Do not hesitate to nominate one of your deserving colleagues or coworkers for the 2019 RISC Awards; we hope that also this year the committee's job of selecting a single awardee will be made particularly difficult by the outstanding level of the nomination packets.

Chiara Guazzoni, the RISC chair, is with Dipartimento di Elettronica, Informazione e Bioingegneria, Politecnico di Milano and with INFN – Sezione di Milano, P.za Leonardo da Vinci, 32 – 20133 Milano – Italy, Phone: +39 02 2399 6147 – Fax: +39 02 2399 3699, E-mail: Chiara.Guazzoni@mi.infn.it

Paul Lecoq can be reached at CERN, 1211 Geneva 23, Switzerland, E-mail: Paul.Lecoq@cern.ch.

Articles

Nanosecond Timing System Based on IEEE 1588 FPGA Implementation

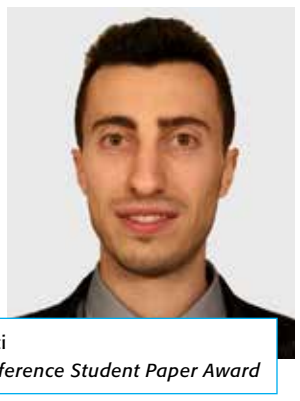

Davide Pedretti
Real-Time Conference Student Paper Award

In the Jiangmen Underground Neutrino Observatory (JUNO) to transcend the neutrino border knowledge, the energy of a neutrino interacting with the scintillator liquid is reconstructed based on the charge information coming from 18,000 photomultipliers (PMT) surrounding the central detector [1]. The JUNO distributed data readout architecture states that the front-end electronics are installed in water-tight boxes very close to the PMT to cope with the high charge resolution requirement [2]. The front-end electronics cards, called Global Control Units (GCU), not only include the analogue-to-digital conversion stage but also an intelligent unit represented by the FPGA that controls the data digitization, the data readout, the slow control and monitoring operations and handles the trigger generation and the first level data buffering where the raw data is stored waiting for the trigger validation. The JUNO trigger system relies on receiving accurate time information available at the front end where the trigger requests generated by different channels are asynchronous and independent events that must be attached with a precise time stamp in order to be correctly processed by the Central Trigger System (CTS). The FPGA is the core of the proposed research activity whose aim is to implement and release a clock synchronization procedure that transfers the global time information from the back-end to the front-end electronics of the JUNO data readout architecture (Fig. 1) with a required resolution of ±16 ns.

Commercial off-the-shelf solutions only partially apply to the JUNO readout architecture since the communication between back-end and front-end electronics relies on a CAT-5e cable. The White Rabbit (WR) network [3] that can provide a sub-ns synchronization with the CTS stops at the backend level (BEC) and cannot reach the front-end electronics. Furthermore, commercial timing systems based on standard Ethernet networks cannot guarantee the required timing accuracy. The packet latency in an Ethernet-based local area network is not deterministic and it is traffic dependent. This generates asymmetry which is a source of error in a message-based synchronization system if not compensated with complex calibration procedures.

The basic concept behind the proposed research work is to exploit the flexibility of the FPGA to replace the Ethernet technology with a deterministic and low-latency bidirectional communication channel implemented over a couple of 80-m-long twisted pairs in the CAT-5e cable. The physical and data-link layers that hold the full duplex and deterministic latency communication between BEC and any GCU have been based on CERN's timing, trigger and control system concept [4]. This reliable multicast messaging system replaces the Ethernet framing and ensures a DC balanced transmission and a self clocking solution. The global clock signal is distributed from the BEC to the front-end nodes as encoded information in the messages: the local clock signal in any GCU refers to the synchronized copy of the global clock signal. The time in the BEC and GCU is implemented in the form of a digital counter that counts the periods of the global clock signal and local clock signal respectively.

ARTICLES Continued on PAGE 12

Nanosecond Timing

Continued from PAGE 11

Without a clock alignment procedure, any local time counter would experience an offset with respect to the global time counter because the start of counting is not synchronized among nodes. For this purpose, the Precision Time Protocol (PTP) for precise clock offset measurement and correction defined in the IEEE 1588-2008 standard have been exploited to align the front-end and back-end clocks [5].

The accuracy of PTP software implementations over standard Ethernet networks rarely extends into the sub-μs range because certain operations require hardware support [6, 7]. In JUNO, we can take advantage of the availability of an FPGA in both BEC and GCU cards and thanks to full hardware implementation of the PTP over the TTC based deterministic latency communication system we were able to extend the clock synchronization to the nanoseconds range. If the assumption of perfect symmetry between transmit and receive paths holds, the theoretical resolution of the fully digital implementation of PTP is ± one global clock period (Fig. 2). In our case, working with a 250 MHz global clock frequency, the expected synchronization accuracy is ±4 ns.

The outcome of the implemented offset correction procedure has been verified programming the back-end and front-end boards to generate a pulse at a scheduled time, and the output pulses have been observed with an oscilloscope (Fig. 3). With a test setup composed of one back-end and three front-end cards and using 3-m-long cables, the resolution achieved is about 1 ns. Increasing the cables' length causes the time accuracy to decrease to about ±4 ns, still well within the requirements of ±16 ns. In order to tie the clock offset error to the expected resolution of ±4 ns, the network delay asymmetry induced by the copper cables has been manually measured and compensated using the delay primitives within the FPGA. Future revisions of the front-end and back-end electronics might be provided with dedicated hardware support in order to allow the possibility of swapping transmit and receive paths, hence allowing an automatic measurement and compensation of the cable length imbalance that can be up to 50 ns in a 100-m-long CAT 5e cable [8].

[1] G. Ranucci, "Status and prospects of the JUNO experiment," J. Phys, 888: 012022, Sep. 2017.

[2] D. Pedretti et al., "The Global Control Unit for the JUNO front-end electronics," in Proc. TIPP'17, Beijing, CHINA, 2017, pp. 186-189

[3] The White Rabbit Project. Accessed: Jun. 10, 2018. [Online]. Available: http://white-rabbit.web.cern.ch/

[4] Timing, Trigger and Control (TTC) Systems for the LHC. Accessed: Jun. 10, 2018. [Online]. Available: http://ttc.web.cern.ch/TTC/intro.html

[5] IEEE Standard for a Precision Clock Synchronization Protocol for Networked Measurement and Control System. IEEE Standard 1588- 2008, 2008. DOI: 10.1109/IEEESTD.2008.4579760.

[6] S. Meier et al, "IEEE 1588 syntonization and synchronization functions completely realized in hardware", Proc. ISPCS, Ann Arbor, MI, USA, 2008. DOI: 10.1109/ISPCS.2008.4659209

[7] "AN-1728 IEEE 1588 Precision Time Protocol Time Synchronization Performance," Texas Instruments, Dallas, TX, USA, Application Report, SNLA098A. Oct. 2007, Rev. Apr. 2013.

[8] N. Simanic et al., "Compensation of Asymmetrical Latency for Ethernet Clock Synchronization," Proc. ISPCS, Munich, Germany, 2011, pp. 19-24.

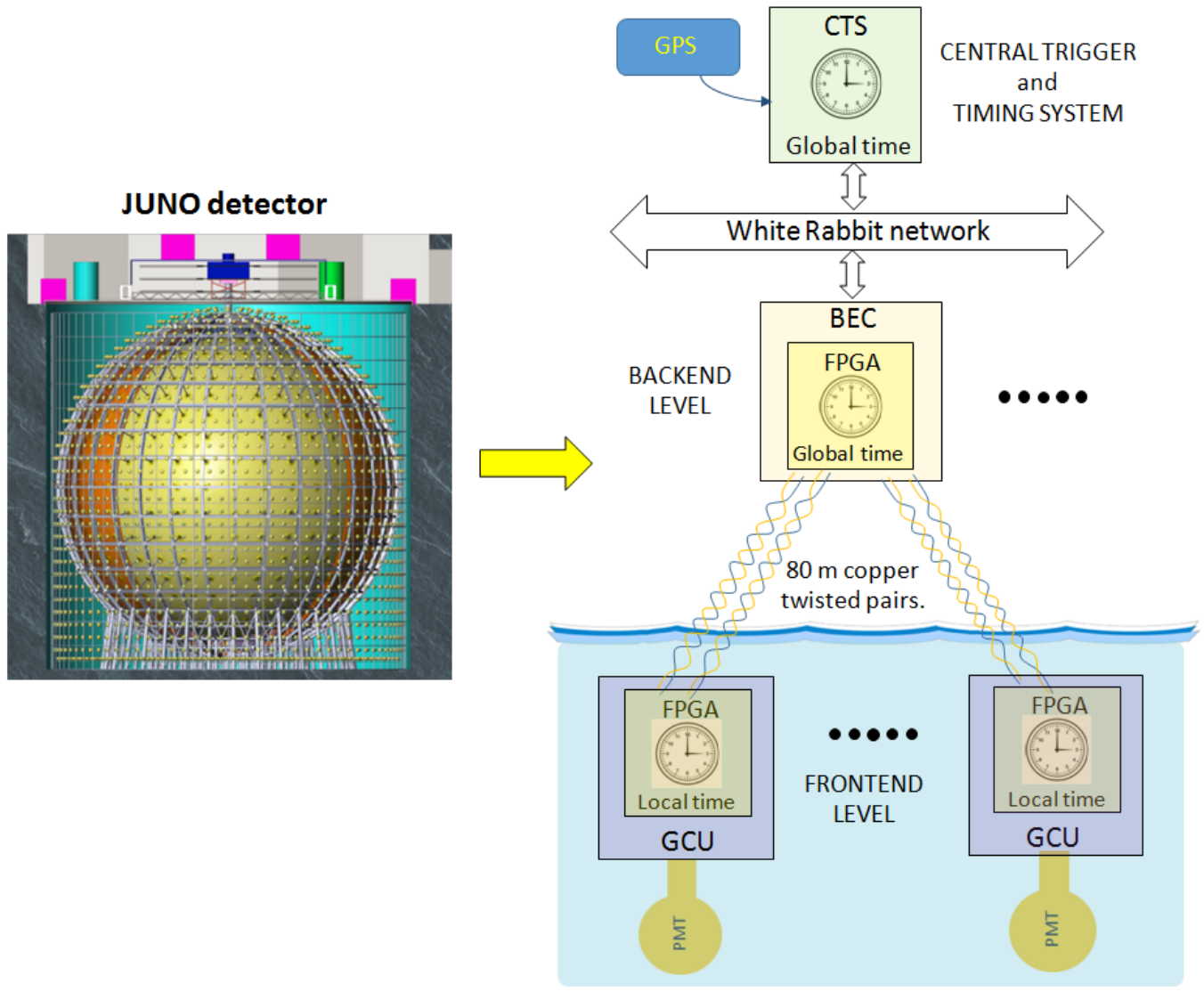

Fig. 1: JUNO readout architecture and synchronization scheme overview. The distributed data readout topology foreseen by JUNO relies on an accurate time information available at the frontend where raw data and trigger requests are tagged with a precise time-stamp essential to precisely determine the energy and the interaction vertex of incident neutrinos.

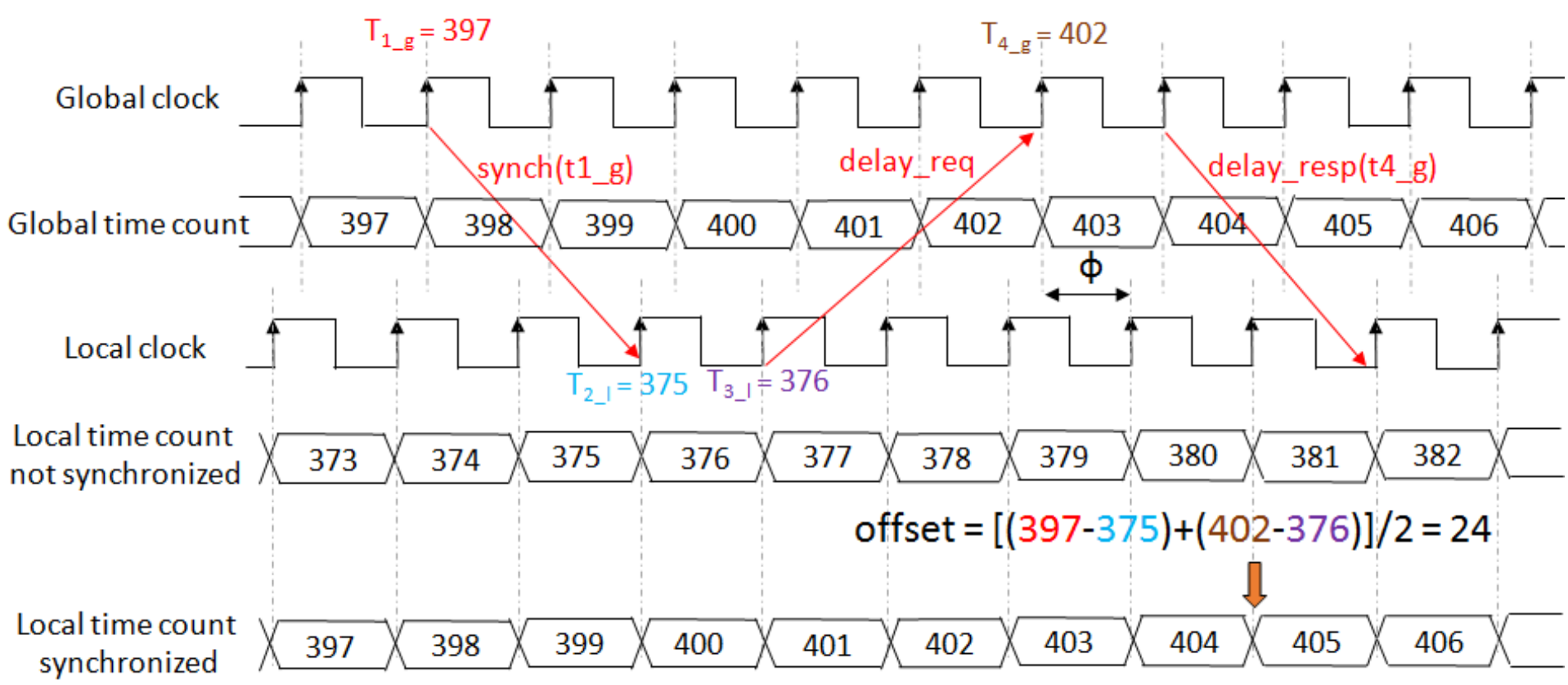

Fig. 2: temporal diagram of the fully digital implementation of the PTP. After exchanging a few messages (red arrows) with the master node, any GCU is able to calculate and correct the offset. The PTP by construction cannot resolve the phase difference φ which is unknown but in principle, without variations of the cable length, it is invariant with a standard deviation imposed by the clock jitter.

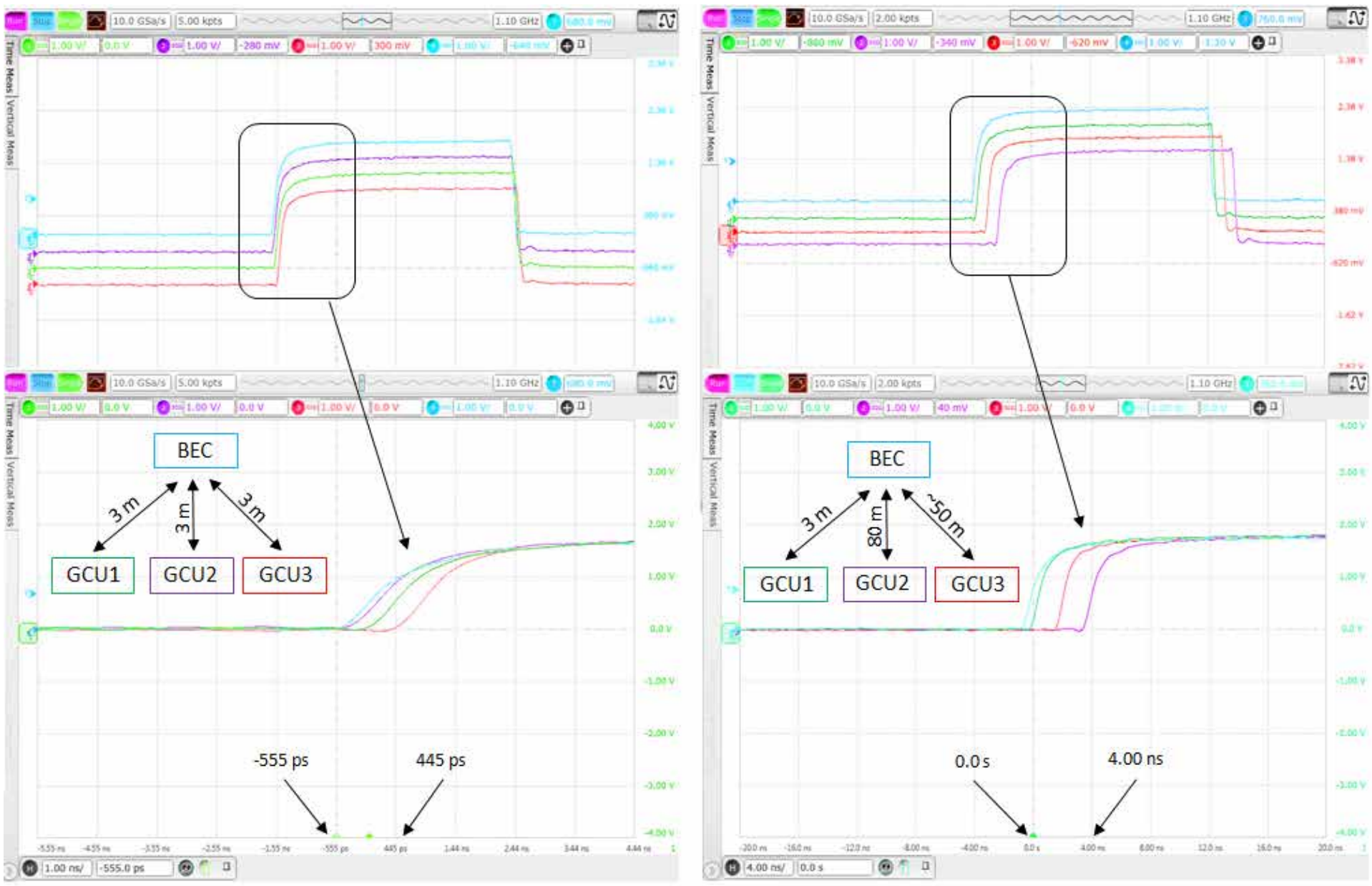

Fig. 3: The test results prove that the FPGA implementation of the PTP that exploits a multicast communication model based on the TTC system as physical and data link layer is a cost effective solution to enable the distribution of the global time information among thousands of timing receiver nodes with the precision of ± 4 ns.

Time-of-Flight Computed Tomography Proof-of-Principle

Reducing the radiation dose while maintaining a good Contrast-to-Noise Ratio (CNR) is the main goal motivating research in Computed Tomography (CT). Usually, this anatomical imaging modality integrates the X-ray photon flux to obtain an attenuation measurement contaminated with a high number of Compton scattered photons[1]. Many solutions have been proposed to reduce this noise, such as mechanical collimators or photon-counting CT with or without energy measurement, the latter being inspired by Positron Emission Tomography (PET)[2]. However, even with these new solutions, further dose reduction is required to minimize exposure in pediatric settings or in longitudinal imaging to follow lesion evolution.

Nowadays, the use of anti-scatter grids to remove scattered radiation is widespread, at the detriment of sensibility[3]. In turn, this requires a higher dose exposure to obtain the same CNR. The presence of scattered photons in the image reduces the contrast, adds inaccuracy in the attenuation measurement and creates artefacts in the reconstructed image. It is especially problematic in cone beam CT imaging systems. In order to discriminate in real time between scattered and transmitted photons, and thus remove the requirement of such sensitivity-reducer collimators, the Sherbrooke Medical Instrumentation Research Group (GRAMS) from Université de Sherbrooke proposed the new concept of Time-Of-Flight Computed Tomography (TOF-CT). The TOF-CT principle uses a pulsed X-ray source along with a high-resolution time-gated detector to detect only photons that had a source-to-detector ballistic path. Diffused photons, that undergo a longer travel path and thus a longer travel time, are discarded from the data forwarded to the reconstruction algorithm.

A proof-of-principle study was conducted to assess the feasibility of such a system using the GATE simulator. A system composed of a pulsed X-ray source of a monochromatic 120 keV photon beam, a 256 x 256 detector array and Plexiglas phantoms of different sizes was simulated. Over half of the scattered photons can be removed with a time resolution of 100 ps, a performance close to photodetectors actually in use. The simulation demonstrated that reducing the time resolution down to 10 ps removes almost every scattered photon and reduces the ratio of scattered to transmitted photons in the data from over 200% to less than 5% during a scan of a large volume similar to a human abdomen. Further time resolution reduction does not yield better results. Finally, a water cylinder containing two bone inserts was simulated in a scanner model with a 165 cm source-to-detector distance and a 256 x 256 detector array or 2 x 2 x 1 mm3 pixels with a monochromatic 100 keV source, to validate the image quality improvement (fig). Results show that the contrast was doubled, and both the attenuation inaccuracies and cup artefacts were significantly reduced for an equivalent dose. The simulation demonstrated a four-fold dose reduction when the same contrast-to-noise ratio is maintained.

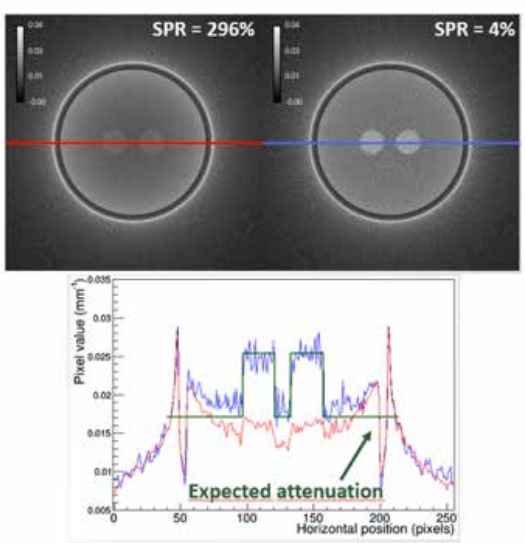

Figure 1 Reconstructed image of a simulated water cylinder containing two bones insert without filtering (top left) and with filtering (top right). Line profile and expected attenuation (bottom).

Julien Rossignol
Christopher J Thompson Best Student Paper

An experiment conducted at CERN used a pulsed soft X-ray source (< 30 keV) and a Silicon Photomomultiplier (SiPM) mounted with a 200 µm LYSO:Ce crystal to measure a statistical difference in TOF between transmitted and scattered photons. This system was first calibrated with a blank acquisition; then, a 4-cm aluminum beam-blocker was added in front of the source to force photons to scatter before reaching the detector. The travel distance was therefore increased by around 12 cm, a distance equivalent to a 396 ps TOF. A 389 ps difference was measured, demonstrating the capability to discriminate between scattered and transmitted photons.

This work was presented last year at the IEEE Medical Imaging Conference in Sydney and was awarded the IEEE NPSS Christopher J Thompson Student Award. This year, for the first time, this award was named after Christopher J. Thompson, a pillar of the community who unfortunately passed away in December 2017, a few weeks after attending the conference one last time. As the 2018 conference was the first scientific conference of my career, I never had the chance to meet him. However, his story, as told by his family and friends in Sydney only a few minutes before my talk, described him as a man recognized for his kindness and dedication, values that I hope to not only share in my career but throughout my life. It is hard not to see a symbol in the award, as Dr Thompson immigrated and built his family and career in Quebec, only a few kilometers away from where I am currently studying. This award reinforces my will to pursue my studies in the field of nuclear sciences and medical imaging, and will help me to find my place in this community as well as in Canada's scientific community, in both of which Dr Thompson was an important member.

Julien Rossignol can be reached by E-mail at Julien.Rossignol@USherbrooke.ca.

[1] J. H. Siewerdsen and D. A. Jaffray, "Cone-beam computed tomography with a flat-panel imager: Magnitude and effects of x-ray scatter," Med. Phys., vol. 28, no. 2, pp. 220–231, Feb. 2001.

[2] J. Giersch, D. Niederlöhner, and G. Anton, "The influence of energy weighting on X-ray imaging quality," Nucl. Instruments Methods Phys. Res. Sect. A Accel. Spectrometers, Detect. Assoc. Equip., vol. 531, no. 1–2, pp. 68–74, Sep. 2004.

[3] E.-P. Rührnschopf and and K. Klingenbeck, "A general framework and review of scatter correction methods in cone beam CT. Part 2: Scatter estimation approaches," Med. Phys., vol. 38, no. 9, pp. 5186–5199, Aug. 2011.

Multimodal Image Reconstruction Algorithms in PET-MR Imaging

Abolfazl Mehranian, Ph.D.
Bruce Hasegawa Award

Simultaneous positron emission tomography (PET) and magnetic resonance imaging (MRI) systems have provided new opportunities for enhancing the diagnostic value and confidence of PET-MR findings through fusion of complementary morphological and molecular information. In addition, these dual-modality systems provide elegant solutions to PET motion correction through estimation of the motion field from MRI data [1], PET partial volume correction using high resolution MR images [2], supplemental functional MR information for PET pharmacokinetic modelling [3] and synergistic reconstruction of PET-MR data [4]. Since 2012, I have been actively involved in the following research projects for developing innovative reconstruction and data correction techniques to improve the image quality and quantitative accuracy of PET-MR images and hence to maximise the benefits of these dual-modality systems [5].

» Joint reconstruction of activity and attenuation in time-of-flight (TOF) PET imaging. Accurate PET attenuation correction is one of the major challenges of quantitative PET imaging in simultaneous PET-MR scanners. Recently, maximum likelihood reconstruction of activity and attenuation (MLAA) from TOF emission data has gained attention. In [6, 7], we proposed a maximum a posteriori reconstruction of activity and attenuation (MAPAA) that improves the quantitative performance of the MLAA algorithm using MR and statistical constraints. As shown in Figure 1, the proposed algorithm not only estimates accurate patient-specific attenuation maps but also corrects for partial volume effects in the PET images. The proposed algorithm was evaluated in several clinical studies [8-10] and demonstrated the superior performance of these emission-based attenuation correction techniques over the more conventional reconstruction and attenuation correction techniques.

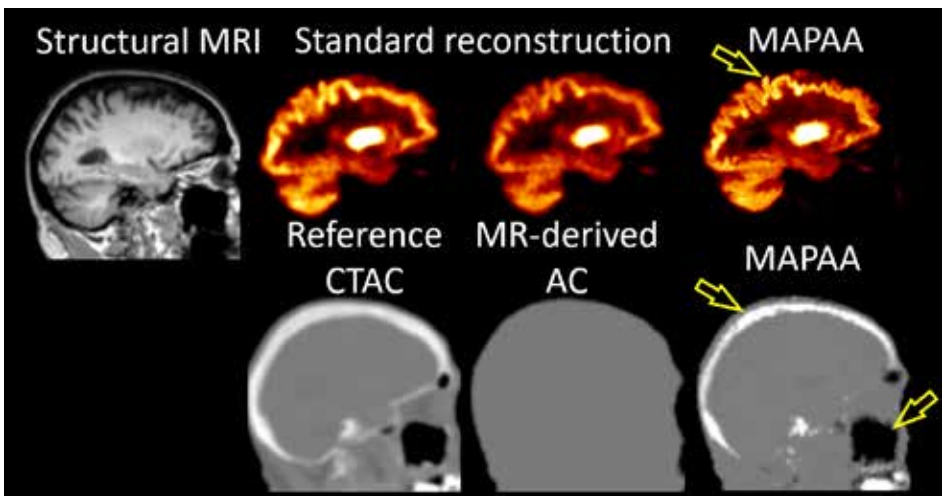

Figure 1. Maximum a posteriori reconstruction of activity and attenuation (MAPAA) compared to the standard reconstruction methods corrected for attenuation using reference computed tomography (CT) attenuation correction (AC) and using MR-derived AC.

» TOF PET image reconstruction and its impact on PET attenuation correction. TOF technology has recently regained popularity in clinical PET studies for improving image quality and lesion detectability. In [11], we proposed a novel approach to improve the convergence of standard TOF PET image reconstruction algorithms through subsetization of emission data over TOF bins. We also elaborated on a practical and efficient implementation of TOF PET reconstruction through precomputation of TOF weighting coefficients while exploiting the same in-plane and axial symmetries used in pre-computation of geometric system matrix. Hence, the proposed methods resulted in improved convergence rate and substantially reduced reconstruction time. In [12], we demonstrated the advantages of TOF PET reconstruction in reducing quantification errors induced by erroneous attenuation maps (i.e. due to artefacts, lack of bone tissues or motion) in a clinical study, as shown in Figure 2. In addition, simulations showed that as the TOF timing resolution is reduced the quantification errors are also reduced.

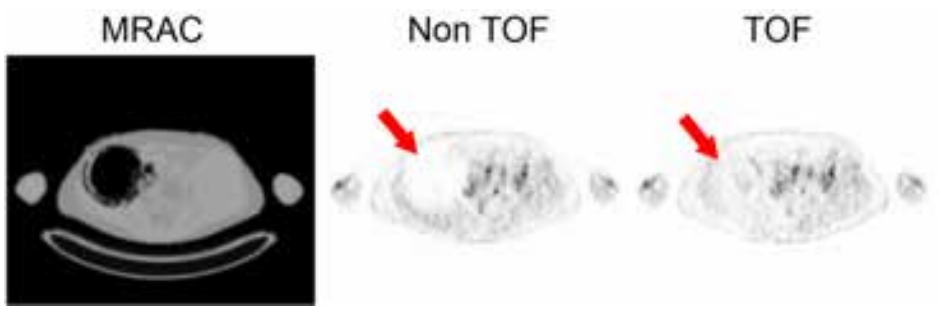

Figure 2. Impact of time-of-flight reconstruction on reducing attenuation correction artefacts in a patient with hip replacement.

» MR-guided PET image reconstruction for low-dose PET imaging. Maximum a posteriori (MAP) reconstruction of PET data using MR-based anatomical priors is a viable option to improve PET image quality in simultaneous PET-MR imaging. However, these methods have not yet gained wide acceptance in clinical practice due to inevitable mismatches between PET and MR. In [13], we proposed to make use of all multi-contrast MR data, usually available in a PET-MR scan session, as well as the PET image under reconstruction to guide reconstruction of PET data. In this project, we proposed a unified framework to calculate multi-parametric weighting factors for guided MAP reconstruction of PET using different priors. Hence, a reliable methodology was proposed to incorporate MR data into PET reconstruction while preserving PET unique features. In addition, as shown in Figure 3, we demonstrated that these advanced techniques can be used to reduce the injected dose or scan time of PET scan while achieving a comparable image to standard reconstructions with up to 5 times more counts.

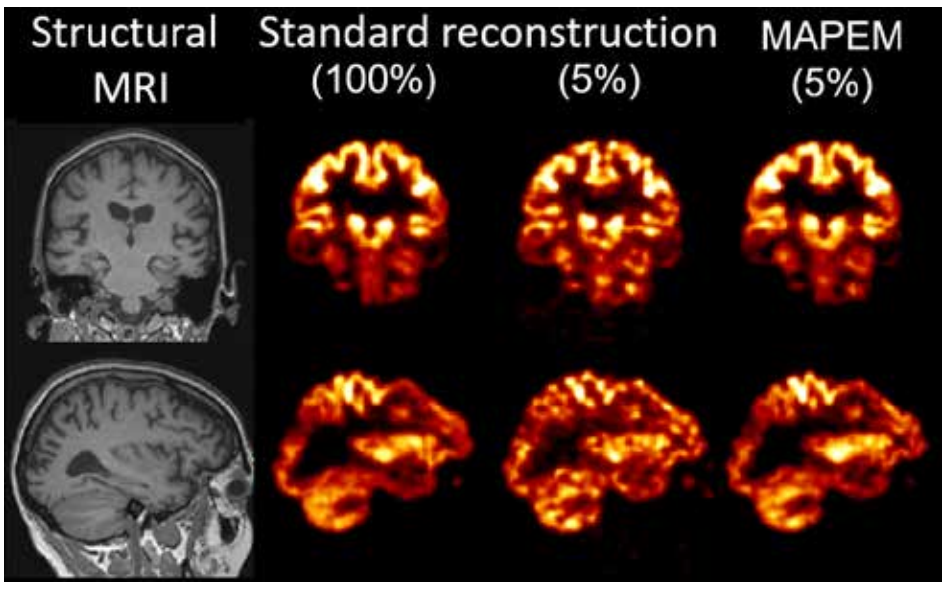

Figure 3. Maximum a posteriori expectation maximization (MAPEM) reconstruction low-dose PET data compared to full-dose (100%) and low-dose (5%) standard reconstruction methods.

» High resolution MR-guided reconstruction of arterial spin labelling (ASL) MRI. ASL is a non-invasive perfusion-weighted MRI technique for absolute quantification of cerebral blood flow (CBF) using magnetically labelled blood water. ASL has emerged as an alternative to other techniques which rely on an exogenous tracer such as dynamic susceptibility contrast MRI or PET perfusion. However, this imaging technique suffers from intrinsically low signal to noise ratio and hence in practice low spatial resolution and partial volume averaging effect. Recently, we proposed a motion-corrected high-resolution anatomically-assisted (MOCHA) reconstruction framework in which all low-resolution ASL data are simultaneously used to reconstruct a single high-resolution perfusion-weighted ASL image which is guided by a structural MR image and simultaneously corrected for rigid motion, partial volume effects and undersampling artefacts [14]. As shown in Figure 4, the proposed method remarkably improves the image quality and resolution of ASL CBF maps compared to a low-resolution conventional reconstruction method. In addition, we demonstrated that using MOCHA the ASL acquisition can be accelerated up to 4 times without impairing image quality, which is of great importance for increasing acquisition resolution of ASL data without increasing scan time.

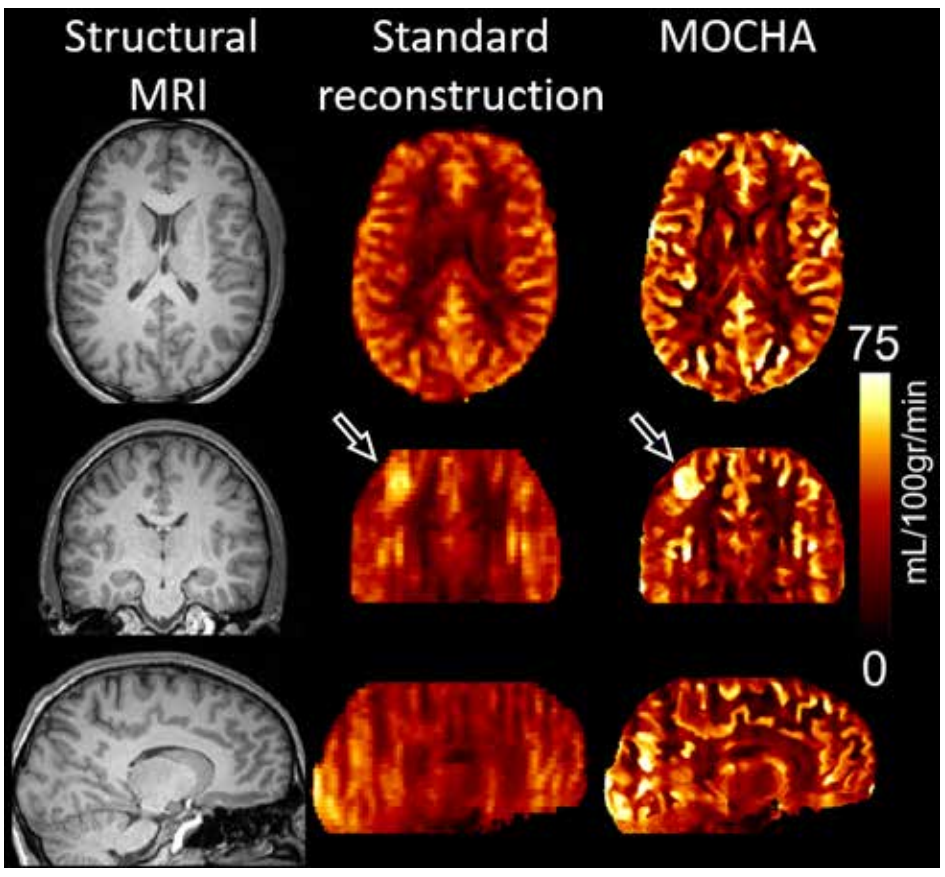

Figure 4. Motion-corrected high-resolution anatomically-assisted (MOCHA) reconstruction of ASL MRI compared to a standard method.

» Synergistic PET and MR image reconstruction. Simultaneous PET-MR systems have opened the way for synergistic reconstruction of PET-MR data to improve image quality beyond conventional independent reconstruction, particularly for low-count PET data and/or highly undersampled MRI data. In [15], we proposed a framework for synergistic PET and multi-contrast MR image reconstruction based on well-established PET and MR reconstruction methods, regularized using adaptively weighted multi-modal quadratic priors. These priors i) are able to preserve modality unique features through calculating weighting factors from all image modalities, ii) are independent of the relative signal intensities and contrast orientations of MR or PET-MR images and iii) easily accommodate synergistic reconstruction of multiple PET or MR datasets. As shown in Figure 5, our in-vivo results demonstrated improved performance of synergistic reconstruction compared to the conventional independent methods, in terms of reduced PET Gibbs and MR undersampling artefacts.

WHAT, ME WORRY?

If you can keep your head when all about you are losing theirs , it's just possible yoi haven't grasped the situation.

Jean Kerr

THE I'S HAVE IT

We used to think that the hard part of the question 'How can I be happy?' had to do with the nailing down the definition of happy. But it may have more to do with the definition of I.

Paul Bloom

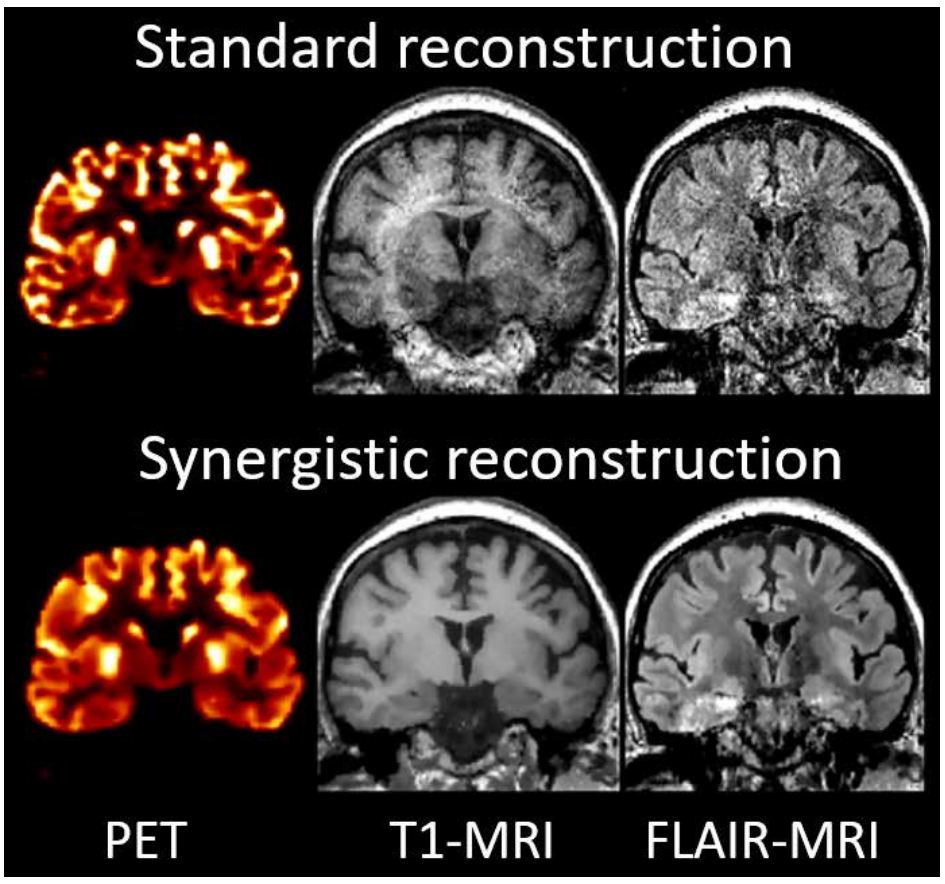

Figure 5. Synergistic reconstruction of low-dose PET and undersampled T1-weighted and undersampled FLAIR MRI images compared to the conventional reconstruction methods.

In summary, the potential of PET-MR images in establishing a new multi-modal parametric imaging paradigm has been a driving force for developing innovative solutions to tackle the challenges in instrumentation, reconstruction and quantification of PET-MR data. Despite tremendous progress made during the last decade, further developments and clinical evaluation of the PET-MR instruments and robust algorithms need to be performed to pave the way for translation of dual-modality systems into clinical settings.

REFERENCES:

1. Ouyang, J., Q. Li, and G. El Fakhri, Magnetic resonance-based motion correction for positron emission tomography imaging. Semin Nucl Med, 2013. 43(1): p. 60-7.

2. Bai, B., Q. Li, and R.M. Leahy, Magnetic resonance-guided positron emission tomography image reconstruction. Semin Nucl Med, 2013. 43(1): p. 30-44.

3. Sari, H., et al., Incorporation of MRI-AIF Information For Improved Kinetic Modelling of Dynamic PET Data. IEEE Trans Nucl Sci, 2015. 62(3): p. 612-618.

4. Mehranian, A., et al., Synergistic PET and SENSE MR image reconstruction using joint sparsity regularization. IEEE Trans Med Imaging, 2017.

5. Mehranian, A., H. Arabi, and H. Zaidi, Vision 20/20: Magnetic resonance imaging-guided attenuation correction in PET/MRI: Challenges, solutions, and opportunities. Medical Physics, 2016. 43(3): p. 1130-1155.

6. Mehranian, A. and H. Zaidi, Joint Estimation of Activity and Attenuation in Whole-Body TOF PET/MRI Using Constrained Gaussian Mixture Models. IEEE Trans Med Imaging, 2015. 34(9): p. 1808-21.

7. Mehranian, A., H. Zaidi, and A.J. Reader, MR-guided joint reconstruction of activity and attenuation in brain PET-MR. Neuroimage, 2017. 162: p. 276-288.

8. Mehranian, A., H. Arabi, and H. Zaidi, Quantitative analysis of MRI-guided attenuation correction techniques in time-of-flight brain PET/MRI. Neuroimage, 2016. 130: p. 123-133.

9. Mehranian, A. and H. Zaidi, Emission-based estimation of lung attenuation coefficients for attenuation correction in time-of-flight PET/MR. Phys Med Biol, 2015. 60(12): p. 4813-33.

10. Mehranian, A. and H. Zaidi, Clinical Assessment of Emission- and Segmentation-Based MR-Guided Attenuation Correction in Whole-Body Time-of-Flight PET/MR Imaging. J Nucl Med, 2015. 56(6): p. 877-83.

11. Mehranian, A., F. Kotasidis, and H. Zaidi, Accelerated time-of-flight (TOF) PET image reconstruction using TOF bin subsetization and TOF weighting matrix pre-computation. Phys Med Biol, 2016. 61(3): p. 1309-31.

12. Mehranian, A. and H. Zaidi, Impact of time-of-flight PET on quantification errors in MR imaging-based attenuation correction. J Nucl Med, 2015. 56(4): p. 635-41.

13. Mehranian, A. and A.J. Reader, Multi-parametric MRI-guided PET image reconstruction, in IEEE Nuclear Science Symposium and Medical Imaging Conference. 2016, in press.

14. Mehranian, A., et al., Motion-corrected and high-resolution anatomically-assisted (MOCHA) reconstruction of arterial spin labelling MRI. Neuroimage, In revision.

15. Mehranian, A., et al., Multi-modal synergistic PET and MR reconstruction using mutually weighted quadratic priors. Magnetic Resonance in Medicine, 2018. 0(0).

Abolfazi Mehranian can be reached at the School of Biomedical Engineering and Imaging Sciences, King's College, London, UK

AHF Launches "Oak Ridge Innovations" Program

Washington, DC (April 17, 2019): "Nuclear medicine, nuclear energy, nuclear weapons. All of that goes back to Oak Ridge," explains Denise Kiernan, bestselling author of The Girls of Atomic City. Oak Ridge, Tennessee has been a center for nuclear research since General Leslie Groves selected it as the Manhattan Project's uranium enrichment site in 1942. Today, Oak Ridge is the home of many leading scientific and engineering research facilities, including Oak Ridge National Laboratory (ORNL).

The Atomic Heritage Foundation (AHF) has launched a new online interpretive program, "Oak Ridge Innovations," to explore Oak Ridge's legacies for science and society today. Available on AHF's "Ranger in Your Pocket" website, "Oak Ridge Innovations" includes more than 30 video vignettes describing ORNL's history and current research in fields such as energy, particle physics, computer science, and medicine. The program was developed in partnership with the Institute of Electrical and Electronics Engineers (IEEE) East Tennessee Section and funded by the IEEE Foundation. Featuring perspectives from current ORNL scientists and Manhattan Project veterans, the program illuminates Oak Ridge's history and how the laboratory responds to some of today's biggest challenges.

"This program connects the dots between Oak Ridge's role in the Manhattan Project and its cutting-edge research today," states AHF President Cynthia C. Kelly. "It will be a valuable educational tool for students and audiences around the world."

"This symbiotic partnership between AHF and the East Tennessee IEEE Section has resulted in a resource for all. It wouldn't be of the quality that it is without each other," adds Austin Albright, the current Chair of the IEEE East Tennessee Section. "People who take advantage of the 'Ranger in Your Pocket' resources will come away with a greater and clearer understanding of the world changing technological innovations that took place in our former secret city and continue at the facilities born of the Manhattan Project to this day. IEEE is glad to show our commitment to remembering the technological innovations of the past as we actively work on the innovations of tomorrow."

The program begins with ORNL researchers describing why they chose to become scientists. Justin Baba, who grew up in Nigeria, has a family history of diabetes. "That was a huge motivation for me: what can we do to help diabetics?" he recalls. "I thought it'd be fun to do medical-related research that could have an impact on the lives of many people for many generations to come." Stories from Baba and other scientists will encourage students to pursue their own interests in science, technology, engineering, and math.

Throughout the program, scientists discuss different global problems and how they work to solve them. One such issue is providing enough energy to meet the needs of a growing world population, which the United Nations projects will reach 9.8 billion by 2050. In one vignette, former ORNL director Thom Mason discusses the promise and limitations of renewable energy, nuclear power, and fusion power. "All three of those different potential energy sources for the future of humanity are elements of the research and development that goes on in the DOE [Department of Energy] labs today, including at Oak Ridge," he explains.

ORNL supercomputers such as Summit, unveiled in 2018, contribute to this research mission. As nuclear engineer Kevin Clarno details, supercomputers are used to make nuclear reactors function more safely and effectively: "We're able to create computer models that predict what is happening in a plant today. Understanding, in very high detail, what is happening, where is it happening. So that they're operating safer; that they can increase the power they produce, without impacting the safety of the plants or the public at all."

Supercomputer calculations are used in surprising ways. Gordon Fee, former manager of the Y12 Plant, describes how Oak Ridge's supercomputers designed skirts that improve the fuel efficiency of semi-trucks. "When you see an 18-wheeler go by you, look under the trailer, and you'll see a skirt that hangs between the wheels. The fuel efficiency is raised somewhere between two and three percent. When you multiply that by the number of trucks on the road, you're talking about a billion dollars' worth of savings in fuel."

Oak Ridge's history is marked by a tension between the peaceful uses of nuclear power and the threat posed by nuclear weapons. Sites like Y-12 remain part of the U.S. nuclear weapons complex. Mason elaborates on what former ORNL director Alvin Weinberg called the "Faustian bargain" of nuclear power: "The same technology platform that we use for generating 20 percent of our electricity in the U.S. and a growing fraction around the world can be repurposed for nuclear weapons in a way that could be destabilizing." Mason discusses ORNL's efforts to secure nuclear materials and ensure they are used only for peaceful purposes.

A major development at Oak Ridge after World War II was the production of radioactive isotopes that are now widely used in medicine. Fee notes the irony that some of the same equipment that produced enriched uranium for the Hiroshima atomic bomb later generated these isotopes. The program describes how doctors can use radioisotopes to treat and diagnose diseases, and highlights innovative research at ORNL into technologies to detect and combat Alzheimer's, Parkinson's, and cancer.

Like the development of medical isotopes, ORNL's research into the effects of radiation grew out of the Manhattan Project. Dr. Liane Russell and her husband, Bill, conducted groundbreaking studies at ORNL's "Mouse House." One pivotal finding was a guideline to protect women who might be pregnant from irradiation by X-rays. "If you could schedule irradiation, it should be restricted to the first two weeks following a menstrual period," Russell explains. "It went into the medical literature, and it's still in use now."

The program cautions that scientific advances can also be used for dangerous or unethical purposes. Denise Kiernan gives an overview of the infamous human radiation experiments at sites including Oak Ridge in the late 1940s, where a number of hospital patients were injected with plutonium without their consent. She remembers the first time she read the so-called "plutonium files" documenting the experiments: "That testing was something that I was really, really, bowled over and shocked by." Much of the information about these experiments did not become public until the 1990s.

Oak Ridge Innovations

Continued from PAGE 15

Today, ORNL researchers pursue cutting-edge research in a variety of fields. Thomas Cormier leads the Large Hadron Collider Heavy Ion Group, which participates in experiments at CERN, the European Organization for Nuclear Research, to explore the physics of the early universe. Cormier details how teams of scientists collaborate: "When it all comes together and works, it's really quite impressive that you can really get that many people moving in the same direction. It's an exercise, really, in sociology as well as science."

Oak Ridge's scientific research since the days of the Manhattan Project has a rich and complex legacy. Today, ORNL employees confront daunting challenges in areas such as energy, health, and national security, but scientist Eric Pierce is optimistic. "The discoveries that will come out into the future, given ORNL's 75-year history, will be quite impactful," he predicts.

AHF thanks the IEEE East Tennessee Section for their collaboration and the IEEE Foundation for their financial contribution to this project. The program was also supported by a generous donation by William K. Coors. Special thanks to the ORNL scientists who contributed their insights to the program. AHF is very grateful to all of these partners for their assistance in exploring Oak Ridge's history and legacies today.

The Atomic Heritage Foundation is a nonprofit in Washington, DC, dedicated to the preservation and interpretation of the Manhattan Project and its legacy. AHF led efforts to create a Manhattan Project National Historical Park for over a decade. Now, AHF is developing interpretive and educational programs for park visitors, students, teachers, and the general public. For more information about the Atomic Heritage Foundation, please visit www.atomicheritage.org.

CONTACTS:

Cynthia C. Kelly, President, Atomic Heritage Foundation
ckelly@atomicheritage.org, (202) 293-0045

Nathaniel T. Weisenberg, Program Director, Atomic Heritage Foundation
nweisenberg@atomicheritage.org, (202) 293-0045

Announcement of New Editor-in-Chief for the IEEE *Transactions on Nuclear Science*

Dr. Paul Dressendorfer is stepping aside as the Editor-in-Chief of the IEEE *Transactions on Nuclear Science* after serving for over 25 years in that position. He would like to thank the Senior Editors, Associate Editors, reviewers, authors, and readers of TNS for making those years a very rewarding and educational experience. It will be difficult to leave that wonderful community, but he will continue to be involved with this journal in his role as the Publications Chair of the IEEE Nuclear and Plasma Sciences Society, the sponsor of TNS.

We are very pleased that Dr. Zane W. Bell is taking over as EiC of TNS. Dr. Bell is a Senior Scientist at the Oak Ridge National Laboratory and an adjunct faculty member of the Clemson University Department of Environmental Engineering and Earth Sciences. He received his B.S. and M.S. degrees in Physics from Rensselaer Polytechnic Institute, a Ph.D. from the University of Illinois at Urbana-Champaign, and a M.S. in Electrical Engineering from the University of Tennessee at Knoxville. He has been involved in radiation measurements and detector development for over 40 years. He has extensive experience in fast timing electronics for nuclear measurements, radiation sensors and systems, scintillators, semiconductor detectors, computer system design, and other aspects of radiation instrumentation.

Dr. Bell is a life member of the APS and a senior member of the IEEE. He served as a Senior Editor for TNS for over eleven years. He is highly qualified to assume the role of EiC for TNS, and we are sure he will do an excellent job in that position, continuing to maintain and improve the quality and stature of TNS.

Complete information on TNS, including instructions for manuscript submission, may be found at https://ieee-npss.org/publications/transactions-on-nuclear-science/. Dr. Bell may be contacted at bellzw@ornl.gov.

CONTRIBUTED ARTICLES

Publicity releases for forthcoming meetings, items of interest from local chapters, committee reports, announcements, awards, or other materials requiring society publicity or relevant to NPSS should be submitted to the Newsletter Editor by July 5, 2019 for the September 2019 Newsletter.

News articles are actively solicited from contributing editors, particularly related to important R&D activities, significant industrial applications, early reports on technical breakthroughs, accomplishments at the big laboratories and similar subjects. The various *Transactions*, of course, deal with formal treatment in depth of technical subjects. News articles should have an element of general interest or contribute to a general understanding of technical problems or fields of technical interest or could be assessments of important ongoing technical endeavors.

Advice on possible authors or offers of such articles are invited by the editor.