NPSS NEWS

ISSUE 4: DEC. 2017

A PUBLICATION OF THE INSTITUTE OF ELECTRICAL & ELECTRONICS ENGINEERS

# SOCIETY GENERAL BUSINESS

## President's Report



Just as I write these lines, the Nobel Prize in Physics has been awarded to Rainer Weiss, Barry Barish and Kip Thorne for their contributions to the LIGO detector and the observation of gravitational waves. This was no surprise to me, as I witnessed the announcement of the first signal via a live video link on Feb. 11th, 2016 at our lab. Seeing the two signals from the Hanford and Livingston detectors recorded on Sept. 14th, 2015, and how nicely they fit on top of each other, it was immediately obvious that this was a real signal and no fake effect. It happens seldom in history that a ground-breaking discovery leading to a Nobel Prize can be described by two waveforms of a few seconds recorded at 16 kHz, which–translated into audio sound like a little chirp. It is amazing to me that the analysis of these little waveforms led to the determination of the black hole masses, their distance from us, and the incredible amount of energy radiated via gravitational waves during the merging process of an equivalent of three solar masses.

Are you interested in having a look yourself at the original data? If so, there is a great way to do so: IEEE DataPort. This new tool is an online repository to share scientific data. I mentioned it in an earlier article, and you will find a dedicated article about IEEE DataPort in this newsletter. While this tool was initially just a theoretical possibility, it now is filling slowly with real and exciting data, some of which led to this Nobel Prize! You will find the Gravitational Waves Discovery Data at https://ieee-dataport.org/documents/gravitational-waves-discovery-data. You can obtain a free beta tester account and download the data in HDF5 format. After five minutes I was able to see the original waveforms, quite an exciting moment for me. I hope that more people from our community share their scientific data in such a way. This not only gives you an organized way of storing experimental data which can be referenced by a Digital Object Identifier (DOI), but it also can lead to alternative (and maybe even improved) analysis of your data by other groups.

The IEEE NPSS elections took place and the results have been announced. I welcome the new AdCom Members David Abbott (CANPS), Christopher Deeney (PSAC), Frank Hegeler (PPST), Jeffrey Black (RE) and Craig Woody (RI). We look forward to a fruitful collaboration with you over the next years. On the other side I would like to thank the Elected Members who are finishing their AdCom term in 2017. These are Martin Grossmann (CANPS), Steve Gold (PSAC), Weihua Jiang (PPST), David Hiemstra (RE) and Dick Lanza (RI). I also thank the TC chairs who leave us this year: Martin Purschke (CANPS), Paul Marsden (NMISC) and Andreas Neuber (PPST). Thank you for all your efforts, it was a wonderful time working with you. While Martin and Steve will stay in AdCom in other functions, the others will leave AdCom by the end of 2017. Thank you Weihua, David and Dick.

2018 will again be full of exciting IEEE NPSS conferences. IPAC will come to Vancouver, Canada; RT to Williamsburg, VA; ICOPS to Denver, CO; NSREC to Waikoloa Village, HI and the NSS/MIC to Sydney, Australia. More information can be found on our conferences website at http://ieee-npss.org/conferences. Maybe one or another of our conferences might be of interest to you. Most conferences offer a companion program, so maybe your partner would be delighted to join you to some of the places, as my wife will do with me.

**Stefan Ritt**
***IEEE NPSS President***

This leaves me wishing you a prosperous and happy year 2018; maybe you will find your own dataset leading to one award or the other.

Sincerely,

*Stefan Ritt, IEEE NPSS President, can be reached at the Paul Scherrer Institute, CH-5232 Villigen PSI, WBWA/140, Switzerland; Phone: +41 56 310 3728; E-mail: stefan.ritt@psi.ch*

**SOCIETY GENERAL BUSINESS**
Continued on **PAGE 2**

# Secretary's Report

Albe Larsen
*IEEE NPSS Secretary and Newsletter Editor*

The IEEE NPSS AdCom met in Atlanta, Georgia on October 28th, with committee meetings held on October 27th. Our society continues in good financial shape, but we, along with most IEEE societies are seeing large income drops from our publications in particular and also from our conferences. Our conferences have been successful this year but they are seeing expanded problems with visas, including canceling of already-granted visas as people were about to board planes! And some conferences are seeing people simply not willing to come to conferences in the U.S., even with accepted papers, because of the uncertain situation for people holding visas.

Conferences are also continuing to close later than is acceptable. Please work with our treasurer, Ralf Engels, r.engels@fz-juelich.de, and Ron Keyser, ronkeyser@ieee.org, assistant treasurer, to get conferences closed within a few months of the conference's end.

The tool developed by NPSS to track conference budgets is now being deployed for all IEEE conferences to use.

Our President, Stefan Ritt, has attended many conferences over the last six months. He strongly advocates 'green' conference attendance, where practical, use media such as WebEx, BlueJeans and Vidyo. Try them! He also noted that 67% of sponsored conferences were held in Regions 7–10 as well as 93% of technically cosponsored conferences. He also noted that the EU General Data Protection Regulation goes into effect on May 25, 2018. This will mean rethinking how IEEE handles data privacy issues.

The projected IEEE budget deficit forecast earlier is expected to be closer to $18M than to the $22.4M originally projected.

Our technical committees report good conferences with a number of 'firsts.' The first Pulsed Power and SOFE conferences were held outside the U.S., in Brighton, UK, and Shanghai, China, respectively. Both had good attendance and excellent technical and social programs. Working abroad did not create any particular difficulties especially as both conferences worked with MCE, the IEEE Meetings, Conferences and Events service offered through IEEE.

The NSS/MIC conference used the new Contxt software developed by EventClass with great success for handling receipt and review of abstracts as well as registration. Problems were fixed within 24 hours in most cases. While this is an excellent software package for large conferences, our smaller conferences are using Indico, developed and maintained by CERN, with equal satisfaction.

Note that our new contact person at MCE is Esther St. Eloi, reachable at +1 732 562 3878.

Susanne Kuehn with Dick Kouzes' help, has updated our web site. Please let one of them, or me, know if you see needed changes.

We are also proud to announce the 2017 NPSS Society Awards with Ron Keyser to receive the Richard Shea Award, Ravi Joshi the Merit Award, and Chao Chang the Young Investigator Award. Look for more detail in March.

## ADCOM ACTIONS

» It was moved by the RISC technical committee, that NPSS Technically cosponsor Calor 18. Passed unanimously

» It was moved by NMISC that NPSS technically cosponsor the 2018 Pet-MR/SPECT-MR conference to be held May 21st–23rd in Isola d'Elba, Italy. We have had past experience with this conference. Passed unanimously.

» PSAC moved that NPSS technically cosponsor the first Asian-Pacific Symposium on Plasma and Terahertz Science and Technology. This is planned as a biennial conference and the first chairman is well-known to NPSS. Many NPSS members will be on the program and advisory committee. Motion passed with two abstentions.

» It was moved by the Radiation Effects TC that an Early Career NSREC award be created. This will be a conference-level award. The motion passed unanimously.

» Motions from the Finance Committee

- It was moved that the Conference Childcare grants become an NPSS-supported activity at the current fiscal levels (up to $2000 per conference; up to $400 per family) for NPSS financially sponsored conferences. For the purposes of Childcare Activities any combined NPSS conferences will be considered as separate conferences.

- It was moved to change the wording in the NPSS Reimbursement Policy as follows:

  "…Functional Committee chairs, Liaison members and EICs who need travel support beyond AdCom meetings related to their positions shall, at the last AdCom meeting of the year, provide the NPSS Treasurer with a detailed budget of what support they will need the following year. The motion passed.

- It was moved that the following policy codification be added to the NPSS Reimbursement Policy: Liaison members of AdCom are funded by NPSS to attend one AdCom meeting each year. NPSS Presidents may make exceptions as they deem necessary. The motion carried unanimously.

- FinCom moves to implement the following policy for Technically Cosponsored Conferences: AdCom will determine for each individual TCS conference whether NPSS will pay the MCE TCS fee for conferences considered for Technical Cosponsorship (TCS). The motion carried with 11 yes, 6 no, and 4 abstentions.

- It was moved that the CANPS conference award be elevated to the level of other NPSS Technical Committee awards for outstanding contributions to the field of that technical committee. This award will become an NPSS Society Award with the amount increased to $3000. The award will be given at each Real-Time conference (biennial). Passed with one abstention.

» The Awards Committee endorsed the following changes to the NPSS Ronald J. Jaszczak Graduate Award as proposed by Ron Jaszczak:

- Change the current award granted over a 3-year period to an annual award.

- Initial annual Award to be presented in 2019

- Eliminate U.S. citizenship requirement

- Increase maximum eligibility age to 35 years old

- Allow nominees from both Universities and Research Institutes

- Nominee must be a regular or student member or have applied for membership of IEEE NPSS by nomination submission deadline date

- Simplify nominee review process (i.e., nominee to be selected directly by the IEEE NPSS Award Committee)

- Allow NPSS AdCom to consider increasing Award amount should IEEE Foundation increase maximum Award allowable amount in the future.

The motion carried unanimously and will be brought forward to TABARC for final approval.

Stefan Ritt introduced a discussion of a Code of Ethics for NPSS meetings. This will be addressed further at meetings in 2018, but a link to the IEEE Code of Ethics is required on all conference web pages. How we will implement this at conferences will also be discussed further.

AdCom will hold its first meeting of 2018 in Santa Fe, NM with a retreat on Friday, March 9th and a regular meeting on Saturday, March 10th.

As Stefan has already, I add my thanks to his to outgoing AdCom members and TC chairs, and look forward to welcoming our new members in 2018.

*Albe Larsen can be reached by E-mail at a.m.larsen@ieee.org*

# Technical Committees

## CANPS REPORT

Martin Purschke
*Chair, CANPS Technical Committee*

The CANPS committee, 2018 conference chairman David Abbott, and Jefferson Lab conference support have been busy preparing the infrastructure for the next Real-Time Conference in the wonderful Colonial Williamsburg conference facilities in Virginia. We are in the final stages of putting together the conference poster, short courses, web sites, abstract submission pages, and so on. By the time you read this, the abstract submission will open. We hope for a high-quality and diverse selection of abstracts for an outstanding scientific program. Head over to https://indico.cern.ch/e/rt2018n for more details.

With my term as CANPS chair coming to its end, I will pass the baton on to the next chairman Martin Grossmann from the Paul Scherrer Institute (PSI) in Switzerland. Martin will lead the committee through the next four years and the two Real-Time conferences in 2018 and 2020. Lots of success and all the best wishes, Martin!

It is my turn to thank each member of CANPS for your hard work and commitment, and all of you for being such an agile and diligent group—at times we held committee meetings ahead of the Padova conference with less than 24 hours notice and still had more than 20 people connected. Thank you all very much.

I timed the sequence of student award winner articles from the Padova Real-Time so that we would close them out during my tenure as chair. As our last contribution from the 2016 conference, we have the fifth article, this one by Chong Liu. Chong holds a bachelor's degree from the University of Science and Technology of China with a major in Applied Physics. He is now working on his Ph.D. designing novel readout electronics for a high performance, Time-of-Flight-enabled PET detector module. Time-of-Flight PET is an area of intensive research. It would give us better image quality, or allow us to reduce the applied radiation dose to the patient. Read the article by Chong Liu later in this newsletter about his progress towards this goal.

*Martin Purschke, Chair of the CANPS Technical Committee, can be reached by E-mail at purschke@bnl.gov.*

## FUSION TECHNOLOGY

Charles Neumeyer
*FTSC Chair*

### SOFE 2019

Preparations are well underway for the 28th Symposium on Fusion Engineering, SOFE 2019. The conference, which highlights the engineering and technology of fusion research, will be held on June 2nd through June 6th, 2019 at the Sawgrass Marriott Resort near Jacksonville, FL, USA. IEEE MCE is assisting in the arrangements and finalizing the venue contracts.

Two minicourses, one on plasma-material interactions and another on 3D radiation transport in fusion devices will occur on Sunday, June 2nd as will an evening reception. A conference banquet is

NUCLEAR & PLASMA SCIENCES SOCIETY NEWS

(USPS 000-560) is published quarterly by the Nuclear & Plasma Sciences Society of the Institute of Electrical and Electronics Engineers, Inc. Corporate Office: 3 Park Avenue, 17th Floor, New York, NY 10017-2394, ieee.org. Printed in the USA. One dollar per member per year is included in the Society fee for each member of the Nuclear & Plasma Sciences Society. Periodicals postage paid at New York, NY and at additional mailing offices. Postmaster: Send address changes to Nuclear & Plasma Sciences News, IEEE, 445 Hoes Lane, Piscataway, NJ 08854.

Sawgrass Marriott Hotel

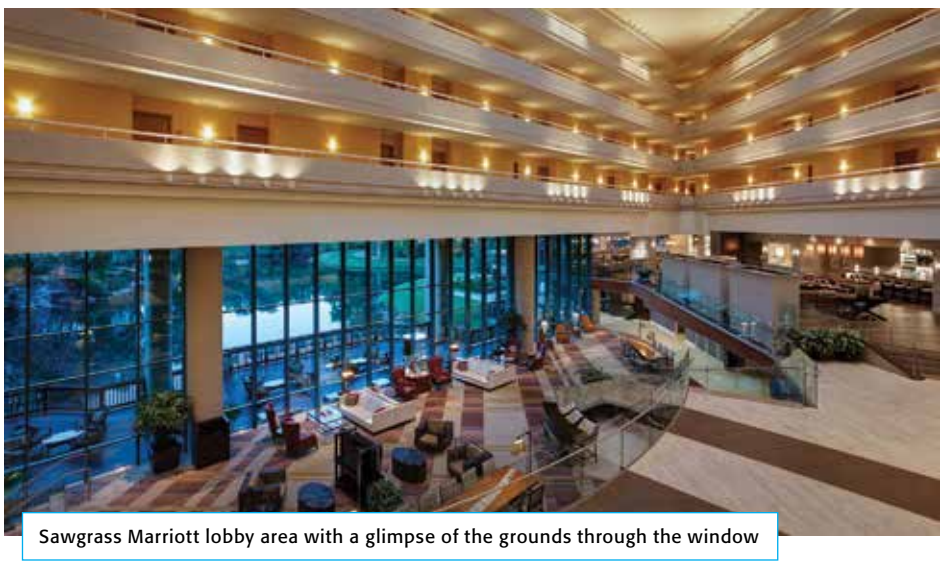
Sawgrass Marriott lobby area with a glimpse of the grounds through the window

planned for Wednesday evening. Once again, we plan to publish selected papers in a special issue of IEEE *Transactions on Plasma Science*. A technical program consisting of invited plenary talks with oral and poster contributions is planned. In addition to the traditional SOFE program, a special session on materials and additive manufacturing is envisioned.

A conference treasurer and a publications chair were selected during the summer, and we are now seeking a volunteer for marketing and publicity. The initial conference budget estimate was submitted to the NPSS treasurer.

*Charles Neumeyer, Chair of the Fusion Technology Committee, can be reached by E-mail at Neumeyer@pppl.gov.*

## NUCLEAR AND MEDICAL IMAGING SCIENCES


Paul Marsden
*NMISC Chair*

At the time of writing, what promises to a very exciting IEEE NPSS Nuclear Science Symposium and Medical Imaging Conference (NSS/MIC) is about to take place in Atlanta. Thanks to the organizing committee for all the hard work that has gone into arranging it. Looking forward, next year's meeting will be in Sydney, Australia, with Anatoly Rozenfeld as General Chair and Steve Meikle and Taiga Yamaya as MIC Chair and Deputy Chair. 2019 will see the meeting come to the UK for the first time. It will be held in Manchester with me as General Chair and Dimitra Darambara and Suleman Surti as MIC Chair and Deputy Chair. Many of you will also be interested in the 2018 PET-MRI and SPECT-MRI Conference ('PSMR') which will take place May 21st through May 23rd in Isola d'Elba, Italy.

We have five newly elected council members starting their three-year terms from 1 January 2018—they are Kira Grogg (Gordon Center for Medical Imaging, MGH, USA), Mathieu Hatt (INSERM, Brest, France), Nicolas Karakatsanis (School of Medicine at Mt Sinai, USA), Andre Kyme (University of Sydney, Australia) and Christoph Lerche (Forschungszentrum, Jülich, Germany). I would like to welcome them and hope we can help them make a significant contribution within the NMISC. I would also like to thank those who did not get elected this year and encourage them as well as others to volunteer in next year's elections by contacting Emilie Roncali, NMISC Secretary who will be putting together the next list of candidates.

Congratulation to our Technical Committee award winners. This year's winner of the Bruce Hasegawa Medical Imaging Conference Young Investigator award is Hadi Fayad from the Université de Bretagne Occidentale, Brest, France for his *contributions to the field of patient motion management in radiotherapy and multimodality imaging applications*.

The 2017 Edward J. Hoffman Medical Imaging Scientist Award was presented to Richard Carson (Yale School of Engineering & Applied Science) for his *contributions to quantification in Positron Emission Tomography including image reconstruction, tracer kinetic modeling techniques, and development and application of mathematical and statistical methods for novel radiopharmaceuticals*.

Thanks to all those who have either volunteered or proposed candidates for awards—I would like to encourage you all to nominate worthy colleagues for the many awards which are available from IEEE and NPSS with deadlines at end of January 2018. More details can be found at http://ieee-npss.org/awards/npss-awards/ and http://ieee-npss.org/awards/ieee-awards/.

Finally, this will be my last newsletter article as chair of NMISC. Jae Sung Lee from Seoul National University will be taking over from January 2018. Thanks very much to all the committee members from the last couple of years and in particular to Dimitris who told me (most of) what was involved in doing this role and also Andrew Goertzen and Emilie Roncali who actually did all the work !

*Paul Marsden, NMISC Chairman, can be reached by E-mail at paul.marsden@kcl.ac.uk.*

## PULSED POWER SCIENCE AND TECHNOLOGY


Andreas Neuber
*PPS&T Chair*

As 2017 comes to a close, we are looking back at a successfully run PPC conference in the UK. This is the first PPC held outside the USA since the PPC's inception in 1976 in Lubbock, TX. We had 509 total registrations at the PPC with 27 exhibitors occupying 33 booths. A total of 26 countries were represented with the largest contingent from the USA, followed by the UK, and the PRC. In case anybody is wondering, our next conference will be held in 2019 jointly with ICOPS, named appropriately PPPS (Pulsed Power and Plasma Science) conference, June 22nd -29th, in Orlando, FL. The PPPS website may be found here http://www.ppps2019.org/.

Prior to PPPS, our PPST/NPSS committee is technically cosponsoring three conferences that have a clear pulsed-power flavor: The IPMHVC 2018 (International Power Modulator and High Voltage Conference) to be held in Jackson, Wyoming, USA, June 3rd–7th, 2018; the 2018 EML Symposium to be held on June 18th–22nd, 2018 in St. Louis, France; the 7th Euro-Asian Pulsed Power Conference with the 22nd International Conference on High-Power Particle Beams to be held on September 16th -20th, 2018 in Changsha, China. Several of our PPST members are involved in the organization of each of these conferences, contributing to their future success.

Continuing the process to a fully elected committee, four newly elected members will join PPST on Jan 1st, 2018 for a four-year term: Stephen Bayne, Texas Tech University; Chunqi Jiang, Old Dominion University; Heather K. O'Brien, U.S. Army Research Laboratory; Igor Timoshkin, University of Strathclyde. We wish to express our gratitude to everybody who was willing to donate their time towards volunteering for our Pulsed Power Community. We will continue our elections in 2018. A list of the current committee members may be found on the NPSS website: http://ieee-npss.org/. In fact, if there is ever a question about what the PPST committee is actually doing, please get in touch with us. It is always good to hear about ideas and how to better serve the Pulsed Power Community.

Please note that nominations for the Arthur H. Guenther Award are currently being accepted. This is an annual award for outstanding students in pulsed power, and we are looking for nomination of qualified students for the year 2018 (Dec. 1st, 2017 deadline). More information on the award and on the nomination procedure can again be found on our committee's web page (Google: PPST NPSS). A more detailed call for nominations can also be found elsewhere in this newsletter.

On a personal note, this is my final year on the PPST committee; I will step down as committee chair at the end of 2017. I wish to thank everybody who has helped to push our community forward and to carry the heavy loads. To my successor, I wish much success and fruitful collaborations across committees.

*Andreas Neuber, Chair of the Pulsed Power Science and Technology Committee, may be reached by E-mail at Andreas.neuber@ttu.edu or by phone at +1 806 834 8270*

**AND MEN THEIR MENDACITY?**
Infants have their infancy; adults, adultery.
*David P. Barash*

# Functional Committees

## AWARDS


Janet Barth
*IEEE NPSS Awards Committee Chair*

The NPSS Awards Committee and Technical Committees are soliciting nominations for our 2018 awards that encompass recognition of both scientific and technical achievement at various levels for scientific and professional service. Nominations for the NPSS Awards are due January 31, 2018. The due dates for the Technical Committee and Conference awards are dependent on the date of the conference, so please check the NPSS Technical Committee website at http://ieee-npss.org/technical-committees/ for details.

The NPSS level awards are comprised of:

### Merit Award

Description: To recognize outstanding technical contributions to the fields of Nuclear and Plasma Sciences. The prize is $5,000, Plaque, and Certificate. Eligibility: Any IEEE NPSS member who has made technical contributions to the fields of Nuclear and Plasma Sciences. Basis for Judging: Selection criteria, in order of importance are: 1) importance of individual technical contributions; 2) importance of technical contributions made by teams led by the candidate; 3) quality and significance of publications and patents; 4) years of technical distinction; 5) leadership and service within the fields of nuclear and plasma sciences and related disciplines. Presentation: One award presented annually at an NPSS-sponsored meeting chosen by the Awardee.

### Richard F. Shea Distinguished Member Award

Description: To recognize outstanding contributions through leadership and service to the NPSS and to the fields of Nuclear and Plasma Sciences. The prize is $5,000, Plaque, and Certificate. Eligibility: Any member of the IEEE and NPSS who has contributed to the fields of nuclear and plasma sciences through leadership and service. Basis for Judging: Selection criteria are: leadership roles and leadership quality; innovative and important contributions to Society activities; service and dedication to the NPSS; technical achievements. Presentation: One award presented annually at an NPSS-sponsored meeting chosen by the Awardee.

### Early Achievement Award

Description: To recognize outstanding contributions to any of the fields making up Nuclear and Plasma Sciences, within the first ten (10) years of an individual's career. The prize is $3,000, Plaque, and

FUNCTIONAL COMMITTEES
Continued on PAGE 4

# Functional Committees

Continued from **PAGE 3**

Certificate. Eligibility: Member of the IEEE NPSS who at the time of the nomination is within the first ten (10) years of his or her career within the fields of interest of NPSS. Basis for Judging: Three (3) letters of recommendation, publications and/or reports, patents, etc. which demonstrate outstanding contributions early in the nominee's career. Presentation: One award presented annually at any major NPSS sponsored conference chosen by the Awardee.

## Graduate Scholarship Award

Description: To recognize contributions to the fields of Nuclear and Plasma Sciences. The prize is $1,500, Certificate, and one-year paid membership in the NPSS. Eligibility: Any graduate student in the fields of Nuclear and Plasma Sciences. Basis for Judging: Evidence of scholarship such as academic record, reports, presentations, publications, research plans, related projects and related work experience. Participation in IEEE activities through presentations, publications, student Chapter involvement, etc., will also be considered. Presentation: Up to four (4) awards presented annually. Check and Certificates sent to nominator to be presented at a special occasion at the winner's institution.

## Charles K. Birdsall Award for Contributions to Computational Nuclear and Plasma Sciences

Description: For outstanding contributions in computational nuclear and plasma science, with preference given to areas within the broadest scope of plasma physics encompassing the interaction of charged particles and electromagnetic fields. The award is funded by the IEEE Foundation though a gift from Ginger Birdsall and the Nuclear and Plasma Sciences Society. The prize is $2,000 and a Plaque. All members in good standing of the IEEE NPSS are eligible. Judging is based on outstanding contributions to computational nuclear and plasma science, with preference given to areas within the broadest scope of plasma physics encompassing the interaction of charged particles and electromagnetic fields. Presentation: At an IEEE NPSS conference specified by the recipient.

## Ronald J. Jaszczak Graduate Award

Description: Recognizes and enables an outstanding graduate student enrolled in an accredited Ph.D. curriculum, Post-doctoral Fellow or Ph.D. level Research Associate in the field of nuclear and medical imaging sciences to advance his/her research activities. The award is funded by the IEEE Foundation though a gift from Ronald Jaszczak and the Nuclear and Plasma Sciences Society. Through 2018 the prize supports one individual for expenses up to $5000 maximum a year for three years. At the time of the initial award period, a plaque is presented designating the individual as the recipient of the IEEE Ronald J. Jaszczak Award. There are several requirements for eligibility which can be found at http://ieee-npss.org/awards/npss-awards/. In 2019 this becomes an annual award.

## Glenn F. Knoll Postdoctoral Educational Grant

Description: For outstanding postdoctoral researchers in the field of nuclear science instrumentation, medical instrumentation, or instrumentation for security applications. The grant is intended to support travel and attendance at conferences, workshops or summer schools, or special research projects. The award is funded by the IEEE Foundation through gifts from Gladys H. Knoll and Valentin T. Jordanov and funds provided by the IEEE Nuclear and Plasma Sciences Society. Prize: $5,000 and Plaque. Eligibility: Any postdoctoral researcher who is a member in good standing of the IEEE and NPSS and is within 10 years of having received their doctoral degree. Judging is based on the accomplishments of the candidate in their field of study and will include the number of publications, talks and presentations at conferences, other awards and recognitions, quality of research and potential for future accomplishment. Up to three letters of recommendation may also be submitted with the nomination to be used in the selection process. Presentation: At an IEEE NPSS conference mutually agreed upon by the recipient and NPSS.

## Glenn F. Knoll Graduate Educational Grant

Description: For outstanding graduate students in the field of nuclear science instrumentation, medical instrumentation, or instrumentation for security applications. The grant is intended to support travel and attendance at conferences, workshops or summer schools, or special research projects. The award is funded by the IEEE Foundation through gifts from Gladys H. Knoll and Valentin T. Jordanov and funds provided by the IEEE Nuclear and Plasma Sciences Society. Prize: $5,000 and Plaque. Eligibility: Any graduate student who is a member in good standing of the IEEE and NPSS. Basis for Judging: Judging is based on the accomplishments of the candidate in their field of study and will include the number of publications, talks and presentations at conferences, other awards and recognitions, quality of research and potential for future accomplishment. Up to three letters of recommendation may also be submitted with the nomination to be used in the selection process. Presentation: At an IEEE NPSS conference mutually agreed upon by the recipient and NPSS.

## NPSS Women in Engineering Leadership Development Travel Grant

Description: To provide leading-edge professional development for women who are in mid-level to senior phases of their careers. One awardee per year will receive a Certificate and be reimbursed for expenses associated with traveling to and participating in the IEEE Women in Engineering International Leadership Conference (WIE ILC) up to a maximum of $3,000. Eligibility: Eligible nominees must be women who are in mid-level to senior phases of their careers who are members of the IEEE Nuclear and Plasma Sciences Society and whose prior technical accomplishments and future potential earmark them as current and future leaders in the field of nuclear and plasma sciences and as role models for future generations of women in the field. Mid-level and senior is defined as no less than 10 years of experience in the nuclear and plasma sciences field after obtaining the highest degree (Bachelor; Master; Ph.D.). Nominees must be able to attend the WIE ILC in the year of the travel grant call. Preference shall be given to applicants who are also members of the IEEE Women in Engineering. Judging is based on leadership roles and leadership quality, technical achievements, and mentoring and outreach activities in areas related to recruitment and retention of women in STEM careers. Presentation: Presented at the IEEE Nuclear and Plasma Sciences sponsored conference chosen by the awardee.

## Phelps Grants

Additionally, NPSS funds a special category award—a Phelps grant—given to encourage Short Course attendance. These are: Paul Phelps Continuing Education Grants. Description: To promote continuing education and encourage membership in NPSS. Prize: Maximum of $8,000/year for all recipients, mostly for tuition in NPSS Sponsored Short Courses but in selected cases, also for partial travel expenses to NPSS Short Courses. Eligibility: Outstanding Student Members of NPSS and unemployed Members of NPSS who need assistance in changing career direction. Basis for Judging: Exceptional promise as a Graduate Student in any of the fields of the NPSS, exceptionally good work in those fields for currently unemployed NPSS members and an expectation that attendance to one or more of the Short Courses will result in improved possibility of obtaining a job in the NPSS fields. Presentation: Presented each year at the NPSS-sponsored conference in which the Short Courses are given. The awards will be handled prior to the dates of the Conference, so that award recipients can apply the corresponding funds towards covering tuition and/or traveling costs to the Short Courses. Those interested in applying for a Phelps Grant should contact the Technical Committee chair hosting the conference with a Short Course.

---

Please nominate one of your colleagues, or yourself, for one of many NPSS awards or grants (self nominations are allowed for some of the awards... just check the details on our web site to be sure). It's a great opportunity to recognize some of the many outstanding colleagues in our field and to raise the level of prestige of our Society. Visit the NPSS Awards website for details of each award, nomination forms, and submission instructions. http://ieee-npss.org/awards/npss-awards/

Before preparing a nomination please note the IEEE policy on Hierarchy of Awards. More information about the hierarchy of awards is provided on the NPSS Awards website. IEEE Policy on Award Limitations states "Normally, an individual shall receive only one honor in recognition of a given achievement, unless the significance of the achievement is such as to merit subsequently a higher award. A higher award may be given in the following year or thereafter."

*Janet Barth, Chair of the IEEE NPSS Awards Committee can be reached by Phone: +1 301 602-3706; or E-mail: jbarth@ieee.org.*

## CALL FOR NOMINATIONS: ARTHUR H. GUENTHER PULSED POWER STUDENT AWARD

**Bryan Oliver**
***PPST Awards Subcommittee Chairman***

Dear Colleague,

One of the greatest honors you can bestow on the distinguished up and coming members of our community is to nominate them for an award. The Pulsed Power Science and Technology Technical Committee (PPS&T/TC) honors graduate student contributions and achievements in the field of Pulsed Power with the annual Arthur H. Guenther award.

The 2018 Arthur H. Guenther award recognizes outstanding students in the field of pulsed power by identifying their unique achievements in the field of pulsed power science, engineering and technology development. The recipients of the 2018 award will receive their honor at the IEEE, 2019 Pulsed Power and Plasma Science (PPPS) Conference.

The deadline for nomination is December 1st, 2017. Information about the award is found at the website http://ieee-npss.org/awards/technical-committee-awards/. Click the link to the "Arthur H. Guenther Pulsed Power Student Award" to view instructions for submission. All nomination materials must be sent as PDF files to the attention of the Awards Committee Chair, Dr. Bryan V. Oliver, at the email address b.v.oliver@ieee.org. Note: Eligibility for the student award requires that the nominee document school enrollment (one long semester minimum) in the calendar year for which the nomination is made.

I strongly encourage you to please look at the website for nomination information and take the time to identify one of the future leaders in pulsed power science and technology.

*Bryan Oliver, PPS&T Award Subcommittee Chair can be reached by Phone: +1 (505) 284-7868 or by E-mail: b.v.oliver@ieee.org.*

## 2017 IEEE/NPSS RADIATION EFFECTS AWARD

**Ronald L. Pease**
***2017 Radiation Effects Award Recipient***

Ronald L. Pease is the recipient of the 2017 IEEE/NPSS Radiation Effects Award. Ron received a B. S. in Physics from Indiana University in 1965, and did graduate work at the University of Washington. He started his career at NAVSEA Crane in 1966, working on radiation effects in bipolar devices. He continued working on radiation effects at BDM (Albuquerque), Mission Research Corporation, and RLP Research until his retirement in 2015. Ron has had a long history of important technical contributions to radiation effects research and to the survivability of critical defense and space systems. This includes testing, analysis, and modeling of dose rate, total dose, displacement damage, and single-event effects in semiconductor devices and circuits. He is widely recognized as a leader in understanding radiation effects on bipolar transistors and bipolar linear circuits, and has published more than 100 peer-reviewed papers on radiation effects. He was one of the discoverers of Enhanced Low Dose Rate Sensitivity (ELDRS) in bipolar technologies, and has been a major contributor to ELDRS characterization and modeling. The original paper on that topic, published in 1991, has been cited 215 times in the published literature. Ron was elevated to IEEE Fellow in 2007.

Ron has been an active participant in the IEEE Nuclear and Radiation Effects Conference (NSREC) for more than 40 years, and has served on committees for several conferences, including Technical Program Chair in 1991, and General Conference Chair in 2000. He was the author or coauthor of four papers that received the Outstanding Paper Award. He has given two short courses at the NSREC, and invited papers and short courses at the European RADECS Conference. He has also been active in the HEART Conference, and received the Peter Haas Award from that committee in 2007.

The Radiation Effects Award was established by the Radiation Effects Committee in 1988 to recognize individuals with a sustained history of outstanding and innovative technical and/or leadership contributions to the radiation effects community. The award to Ron Pease was presented on July 18th at the 2017 Nuclear and Space Radiation Effects Conference.

***Citation:*** *For contributions to testing, analysis, and modeling of radiation effects on semiconductor devices and circuits and to the understanding of the underlying physics and engineering.*

*Teresa Farris, Radiation Effects Vice Chair for Publicity, can be reached by E-mail at Teresa.Farris@cobham.com.*

---

**FAIR ENOUGH**

I do not see why we should have the disadvantages of being gentlemen while they have all the advantages of being cads.

*Winston Churchill*

## CHAPTERS

### ISAE SUPAERO Launches IEEE Student Branch Chapter

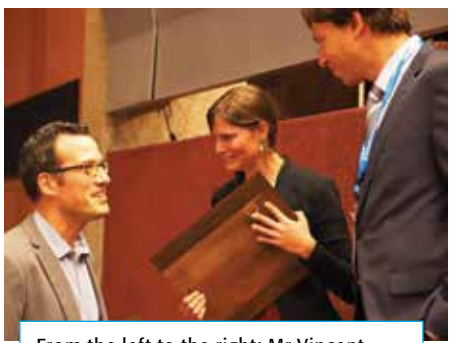

From the left to the right: Mr Vincent Goiffon (Branch Counselor from ISAE SUPAERO), Mme Clémentine DURNEZ (Branch President from ISAE SUPAERO) and Dr. Markus Brugger (General chair RADECS 2017 from CERN)

Jean-Luc Leray, NPSS membership vice chair for Region 8, presents Student Branch Chapter Founder's plaque to Mr. Vincent Goiffon, the Chapter's sponsor.

NPSS chapter. This partnership led to the creation of an association actively supported by the NPSS chapter, extending the student NPSS community in IEEE Region 8. The ISAE SUPAERO Student Branch committee is proud to join the existing NPSS student branches in Alexandria, Egypt; Cartago, Costa Rica and Tamil Nadu, India; and is looking forward to reinforce the NPSS community in our school. Today, the ISAE SUPAERO Student Branch comprises 21 active members devoted to initiating meetings involving NPSS distinguished lecturers.

More information about the ISAE SUPAERO Student Branch can be found at: https://student-branch-ieee.wixsite.com/occibranch.

*For further information, contact Alexandre Le Roch, Vice President, ISAE PUPAERO by E-mail at Alexandre.LE-ROCH@isae-supaero.fr.*

## IEEE FELLOW NOMINATIONS DUE MARCH 1

Jane Lehr
*Chair, Fellow Evaluation Committee*

I encourage you to nominate a colleague whose work you admire for consideration for grade elevation to IEEE Fellow. Being recognized as a Fellow is a milestone in one's career and well worth pursuing. Nominations for the IEEE Fellows Class of 2019 are being accepted online until March 1.

To be considered, a nominee must meet the following three basic qualifications:

- Significant accomplishments that have contributed importantly to the advancement of engineering, science and technology to society;
- hold the grade of Senior Member in the IEEE at the time the nomination is submitted;
- be a member in good standing in any grade for a period of five years or more preceding January 1 of the year of elevation. Note that IEEE affiliate membership within an IEEE society does not apply. One caveat is that those who are prohibited from publishing in IEEE publications are ineligible for elevation to the Fellow grade.

The application process is initiated by the nominator; self-nominations by a candidate are not permitted. That said, as Society Fellow Evaluation Committee Chair, I usually recommend that the nominee suggest an initial draft. However, any person, including non-IEEE members, are eligible to serve as nominator. The nominator is responsible for:

- Preparing the IEEE Fellow Grade Nomination Form, making sure all information is current and the form filled out correctly.
- Soliciting at least five, but no more than eight, references capable of assessing the nominee's contributions.

A reference must be an IEEE Fellow in good standing but a nominator who is an IEEE Fellow may not serve as a reference for a nomination he/she is submitting. There is an exception for candidates and nominators from Region 9. Please see the Fellows page on the IEEE website for the details of this exception.

There is the option of soliciting no more than three endorsements capable of supporting the nomination. Any person, including non-IEEE members, may submit an endorsement. Individuals involved in the Fellow selection process are generally ineligible to serve endorsers. It is important to note that the role of the Endorser is to enhance the nomination by elucidating either the significance of the technical contribution or the significance of the candidate's service to the IEEE or the community. It does not enhance the nomination to indicate the nominee is ambitious. In addition, a nominator may not serve as an endorser for a nomination he is submitting.

The Fellow evaluation process consists of two evaluations. The first evaluation is completed by the IEEE Society/Technical Council which the nominator may identify on the nomination form. The Society evaluation is an extremely important ranking process by persons who are familiar with the nature of the nominee's work. The NPSS Fellow Evaluation Committee is comprised of IEEE Fellows from across NPSS with a consideration of both technical and geographic diversity.

After the Society Fellow Evaluation Committee review is complete, those technical comments and nominee rankings are incorporated, along with other considerations, by the IEEE Fellow Committee into the final recommendations for elevation to the Fellow grade. The IEEE Fellow Committee consists of 52 members, all of whom are IEEE Fellows with expertise in any of the technical areas represented by IEEE societies/technical councils and selected to represent the ten IEEE Regions.

The IEEE Fellow Committee recommends nominees to the IEEE Board of Directors, according to the following criteria.

- significant contributions as Application Engineer/Practitioner, Educator, Research Engineer/Scientist, or Technical Leader;
- evidence of technical accomplishments;
- evaluation by the IEEE Society/Technical Council selected by the nominator;
- confidential opinions of references and endorsers;
- service to other professional engineering societies;
- total number of years in the profession.

According to IEEE Bylaw I-305.5, the total number of Fellow recommendations in any one-year must not exceed one-tenth of one percent of the voting membership on record as of 31 December of the year preceding. The IEEE Board of Directors make the final selection at their November meeting.

On behalf of the NPSS Fellow Evaluation Committee, I urge you to nominate a deserving colleague for IEEE Fellow—a noteworthy milestone in anyone's career. It is an extremely competitive process—and is always challenging to review these nominations—but I hope you can make the job of the NPSS Fellow Evaluation Committee even more difficult by increasing the number on nominations in 2018.

## PUBLICATIONS

Steve Gitomer, Editor-in-Chief
*IEEE Transactions on Plasma Science*

### *IEEE Transactions on Plasma Science*

### Upcoming Special Issues through June 2018

- December 2017—Plasma Assisted Technologies—Senior Editor: Steven Gitomer (Los Alamos National Laboratory (ret), Los Alamos NM USA); Guest Editors: Igor Matveev (Applied Plasma Technologies, Falls Church VA USA) & Tim Ombrello (Air Force Research Laboratory, Wright Patterson AFB OH USA).
- January 2018—Selected Papers from International Workshop on Micropropulsion and Cubesats—Senior Editor: Steven Gitomer (Los Alamos National Laboratory (ret), Los Alamos NM USA); Guest Editors: Shuyan Xu (Nanyang Technological University, Singapore), Michael Keidar (George Washington University, Washington, DC USA), Francesco Taccogna (CNR-Nanotec—P.Las.M.I. lab Particle-Based Plasma Model (PBPM) Group, Bari, Italy), Igor Levchenko (Nanyang Technological University, Singapore and Queensland University of Technology, Brisbane, Australia).
- March 2018—, Selected Papers from Latin American Workshop on Plasma Physics—2017—Senior Editor: Steven Gitomer (Los Alamos National Laboratory (ret), Los Alamos NM USA); Guest Editors: J. Julio E. Herrera-Velázquez (Coordinator) (Instituto de Ciencias Nucleares, Universidad Nacional Autónoma de México, Mexico DF, México), Martín Nieto-Pérez (Instituto Politécnico Nacional, Querétaro, México), Salvador Portillo (Department of Electrical and Computer Engineering, University of New Mexico, Albuquerque, NM, USA).
- April 2018—Plenary, Invited & Selected Tutorial papers from ICOPS-2017–Senior Editor: Steven Gitomer (Los Alamos National Laboratory, Los Alamos, NM, USA [ret.]); Guest Editors: Jose Lopez (Seton Hall University, South Orange, NJ, USA), Kurt Becker (New York University, New York, NY, USA), WeiDong Zhu (Saint Peter's University, Jersey City, NJ, USA) & Arati Dasgupta (Naval Research Laboratory, Washington, DC, USA)April 2018
- April 2018—Selected Papers from SOFE '17—Acting Senior Editor: Elizabeth Surrey (Technology, UKAEA, Culham Science Centre, Abingdon, United Kingdom); Guest Editors: William Cary (General Atomics, La Jolla, CA USA), Irving Zatz (Princeton Plasma Physics Laboratory, Princeton, NJ USA), Paul Humrickhouse (INL—Idaho National Laboratory, Idaho Falls, Idaho, USA), Dennis Youchison (Oak Ridge National Laboratory, Oak Ridge, TN USA), Yuhu Zhai (Princeton Plasma Physics Laboratory, Princeton, NJ USA) & Shanliang Zheng (CCFE/UKAEA, Culham Science Centre, Abingdon, United Kingdom).
- April 2018—Dusty Plasmas – Senior Editor: Truell Hyde (Baylor University, Waco, TX, USA); Guest Editors: Peter Hartmann (Research Institute for Solid State Physics and Optics, Budapest, Hungary) and Jirka Pavlu (Charles University, Prague, Czech Republic).
- May 2018—Z Pinch Plasmas—2018—Senior Editor: Farhat Beg (UCSD, San Diego, CA USA); Guest Editors: Alla Safronova (University of Nevada—Reno, Reno, NV, USA) & John Giuliani (Naval Research Laboratory, Washington, DC USA).
- June 2018—High Power Microwave Generation—Senior Editor: Don Shiffler (Air Force Research Laboratory, Kirtland, NM, USA); Guest Editors: Brooke Stutzman (US Coast Guard Academy, New London, CT, USA), Jim Browning (Boise State University, Boise, ID, USA), Julie Lawrance (Air Force Research Laboratory, Kirtland, NM, USA), Wenlong He (University of Strathclyde, Glasgow, UK).

*Steve Gitomer can be reached by E-mail at steve@lanl.gov.*

**SOME FOOL!**
I confess to being an optimist about things, especially about someday being able to understand how things are put together. So many young people are forced to specialize in one line or another that a young person can't afford to try to cover the waterfront—only an old fogy who can afford to make a fool of himself. If I don't, who will?
*John A. Wheeler*

**OK BY ME!**
There are no interruptions scheduled at this time. We apologize for any inconvenience this may cause.
*Vancouver Public Library web site*

**BETTER IS THE TOUGH PART**
Originality consists not only in doing things differently, but also in 'doing things better'.
*Edward Stedman*

**YOU FIRST**
The early bird may get the worm but the second mouse gets the cheese.
*Willie Nelson*

**NOT ALL THE TIME**
The value of marriage is not that adults produce children, but that children produce adults.
*Peter de Vries*

**STRONG, SILENT TYPE?**
He hasn't got much to say, but at least he doesn't try to say anything else.
*Robert Benchley*

# A 3.9 ps RMS Resolution Time-to-Digital Converter Using Dual-sampling Method on a Kintex UltraScale FPGA

**Chong Liu**
*Real-Time Student Paper Award Recipient*

TIME-TO-DIGITAL converters (TDCs) are widely used in high-energy physics and many other scientific applications. In the field of positron emission tomography (PET), the time coincidence technique is the most powerful means of event selection. As shown in Fig. 1, in a conventional PET detector we measure "lines of response" (LOR), which are the connecting lines between two detector elements that have measured coincident signals. All that is known is that the decay was somewhere along that line. A Time-of-Flight (TOF) measurement would allow us to restrict the position along the LOR further to the resolution of the TOF measurement. For example, in a human-sized scanner with a bore of 40 cm, the time difference between two opposite detector elements is 1200 ps. With a time resolution of 600 ps, the position along the LOR can be restricted to half the LOR length. In the two-dimensional image reconstruction, this leads to an improvement in the image quality of a factor of 4, which could also be used to reduce the acquisition time, or to reduce the applied radiation dose by a factor of 4. Because PET systems contain many detector modules, high-performance, multichannel TDC systems with low measurement dead times are in high demand.

The basic principle implementing a TDC on a field programmable gate array (FPGA) is using a time counter and a time interpolator to provide a coarse timestamp and a fine timestamp, respectively, for a hit signal. This principle requires finer delay granularity for higher time resolution.

Normally, an FPGA manufactured using a more advanced processing technology will have smaller intrinsic delay elements. During our exploration using Xilinx Kintex UltraScale FPGA, which is manufactured by 20 nm processing technology, we found the logic resource in this family suitable for the implementation to sample the single tapped-delay line (TDL) status twice. We built the TDC channels with this new method and called it dual-sampling. The effect of the dual-sampling method is equivalent to double the number of taps in the delay line, which will greatly improve the time resolution. Normally, an FPGA can resolve state changes, such as the arrival of a timing signal, only at the granularity of the clock frequency at which it is running. A TDL is constructed from logic gates connected in a series "chain.. As state change propagates through that chain, each gate introduces a small delay. By sampling the outputs of the individual gates in the chain, we measure the depth of the "penetration" of the signal change into the chain that allows us to obtain a timing accuracy smaller than one clock cycle. The TDL is constructed by connecting the carry logics in each logic slice and cascading the slices. After a hit signal arrives, a rising edge will propagate on the carry chain. The state of carry chain will be captured into registers when the rising edge of system clock comes as shown in Fig. 2. As the chain sequence is not ordered, the original output code is like 00010111. After a switch by the realignment fabric, the code is converted to 00001111, which is easier for encoding. The output code of realignment fabric is then encoded to one hot code like 00001000, which is encoded to binary code like 100. The binary code is sent to a calibration circuit for a bin-by-bin calibration. After this calibration, it adds a fine time stamp to a hit signal together with a coarse time stamp.

The predefined logic resource of slices in the UltraScale FPGA provides another possibility to improve the time precision beyond the limitation of the intrinsic delay granularity. Different from its predecessors [1], each slice in the UltraScale FPGA has eight carry logics, each accompanied by two D flip-flops. With this new structure of the logic resource, the TDL can be tapped out twice. Fig. 3 shows the new structure of the TDL in slice k, where outputs Oi and COi are connected to the two D flip-flops. Therefore, each slice has 16 taps, which are named T16k+0, T16k+1, ..., T16k+15, respectively. Because the status of the TDL is sampled by the two banks of D flip-flops simultaneously, this method is named the dual-sampling method. One delay element sampled twice will form two different TDL bins. The effect of the dual-sampling method is equivalent to subdividing one delay element into two. One delay line now has twice the number of taps.

To test the effect of dual-sampling, we implemented both single-sampling TDC and dual-sampling TDC as a contrast. The hit signals for TDC were generated by the arbitrary waveform generator AWG5012C from Tektronix. The time interval between the hit signals was adjusted by setting the phase difference between the two output channels. The hit signals triggered the TDCs to record both the coarse timestamps and the fine timestamps.

The test result in Fig. 4 shows that the RMS resolution of dual-sampling TDC is 3.68 ps to 4.12 ps with an average value of 3.9 ps and the single-sampling TDC is 5.48 ps to 6.06 ps with an average value of 5.8 ps within our tested time interval in range from 0 to 440 ns. The test result shows that the dual-sampling method gets a 32.7% better timing resolution only with the cost that more capturing registers and a bigger encoder module are needed. With a 500 MHz clock used, the total resources occupied by each TDC channel are well within the capabilities of the Kintex UltraScale FPGA, which makes implementing multi-channel TDCs on a single FPGA feasible.

## REFERENCES

[1] C. Liu, Y. Wang, "A 128-Channel, 710 M Samples/second, and Less than 10 ps RMS Resolution Time-to-Digital Converter Implemented in a Kintex-7 FPGA," IEEE *Transactions on Nuclear Science*, Vol.62, No.3, JUNE 2015, pp773-783.

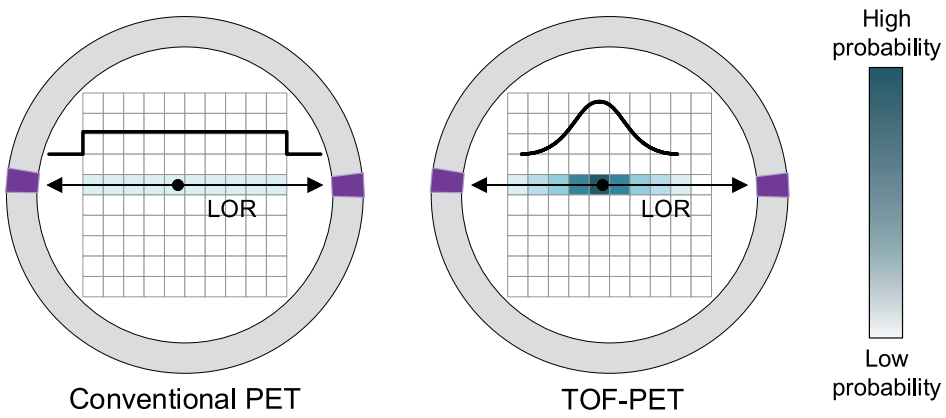


Fig1: Principle diagram of conventional PET and TOF-PET.

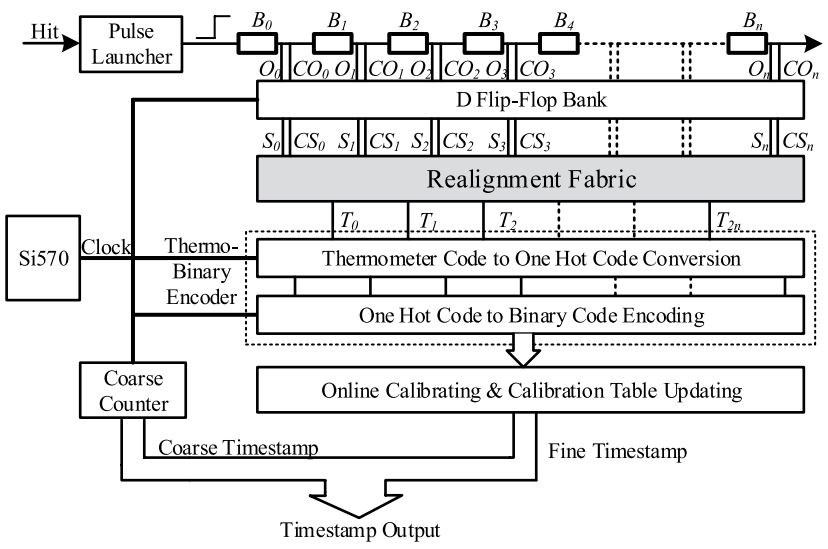


Fig2: Diagram of functional blocks in a TDL-TDC.

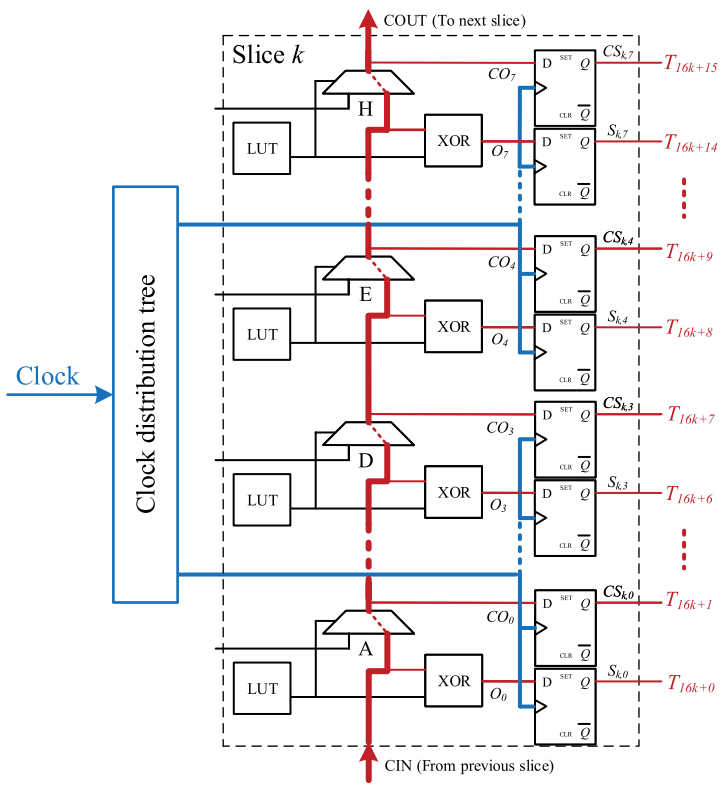


Fig3: Using the carry chain in the Kintex UltraScale FPGA to construct the tapped-delay line.

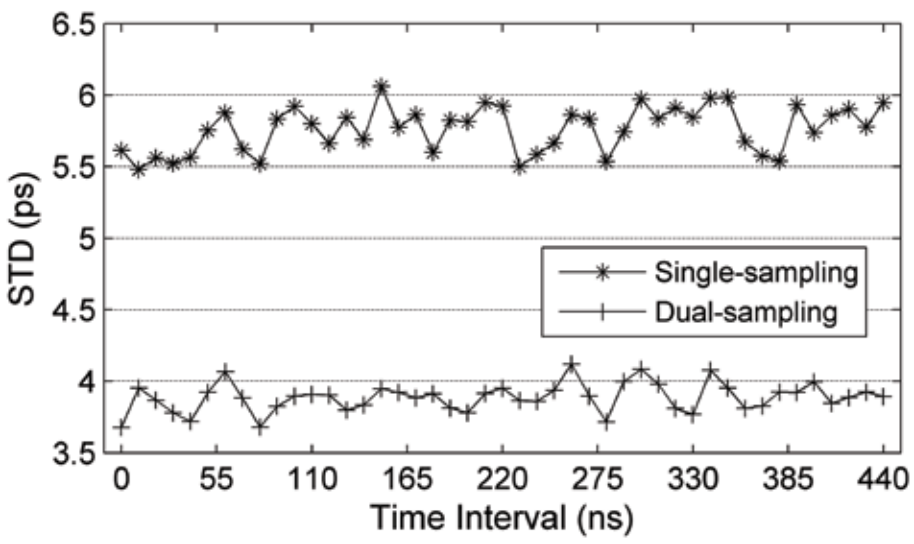


Fig4: RMS resolution of dual-sampling TDC and single-sampling TDC.

**I HEAR YOU!**

"You have a great gift of silence, Watson," said he, "it makes you quite invaluable as a companion."

*Arthur Conan Doyle*

**WHOA!**

The trouble with nude dancing is that not everything stops when the music stops.

*Robert Helpman*

# Fast Integral Solver in Computational Plasma

Naiguang Lei
*Author*

Every time when we talk about computational plasma physics we are talking about different kinds of mathematical models which will describe or approximately describe different aspects of plasma physics and different kinds of numerical methods and algorithms which have been applied to solve the mathematical models. With the accelerating development of computational equipment, more sophisticated plasma physics phenomena have been explained by numerical methods, revealing previously unknown plasma physics phenomena. However, due to the extreme complexity of plasma physics, developing faster and more accurate numerical methods and algorithms is the unremitting pursuit for computational plasma scientists.

The integral equation method, one of the most popular numerical methods, is involved in several computational plasma models, such as electrostatic potential and electric field evaluation in Kinetic models, ideal magnetohydrodynamics, and so on. My research is focusing on the acceleration of integral equation method. For a given integral operator,

$$\phi(x) = \int G(x;y)\,\rho(y)\,dy$$

with proper basis functions representing the unknowns, and applying the Galerkin method with proper testing functions, we can transfer the integral equation into matrices form,

$$[A]_{N\times N}\,[q]_N = [\phi]_N$$

Due to the nature property of the kernel functions $G(x;y)$ for most integral equation models, the integral operator matrix is $[A]$ a full matrix. Obviously, when we apply the matrix-vector multiplication of $[A]_{N\times N}[q]_N$, the computational complexity is in the order of $O(N^2)$. To accelerate this calculation, we have studied several approaches.

Let's consider a group of basis functions and a group of testing functions, whose physical interactions are represented as a sub-block $[a]_{m\times m}$ in matrix $[A]$. When the two groups, the group of basis functions and the group of testing functions, are near to each other, the physical interactions between any pair of testing and basis functions will be sensitive to each other; on the contrary, when they are far-apart, the physical interactions between any pair of testing and basis functions will be similar. In other words, the corresponding sub-block of the matrices, which represents the far-apart groups, can be re-described with fewer parameters. This kind of matrix is considered to be a low-rank matrix, and the sub-blocks which represents near field interactions are full-rank matrices. For instance, if an $m$-$by$-$m$ sub-block $[a]$ is low-rank, it can be represented as:

$$[a]_{m\times m} = [u]_{m\times r}\,[v]_{r\times m} + [e]_{m\times m}$$

where, $[e]$ is the error matrix and $r$ is called rank of matrix $[a]$. To take advantage of the low-rank of the sub-blocks, the well-established singular-value decomposition (SVD) method can be used to derive a compressed form of the MoM matrices. However, SVD method is computationally expensive. There are several methods that can be applied to compress a low-rank matrix. One of the most popular methods, adaptive cross-approximation (ACA), which requires partial knowledge of the matrix $[a]$ to find its approximated compressed form. The entire process requires $O(r^2m)$ operations to obtain the compressed matrix with a memory requirement of $O(rm)$, and once the approximation is generated, $O(rm)$ operations will be needed to calculate each matrix-vector multiplication[1]. Another recently developed method, namely, randomized algorithm[2] for the approximation of low-rank matrices has two variations: first, compress a matrix by the randomized algorithm called interpolative decomposition (ID); second, use the ID to obtain a much more efficient SVD method. By using this algorithm, we can construct a rank $k$ approximation $[Z]$ from $[A]$ at a cost proportional to $O(m^2\log(k)+2l^2m)$. For the purpose of compressing the matrices, it will be sufficient to use ID only, and the computational efficiency complexity of ID is $O(m^2\log(k)+lkm)$. Both ACA and ID method are easy to be computed in parallel.

Another algorithm to speed up the matrix-vector multiplication is fast multipole algorithm (FMA), which is one of the most popular methods used in solving various IE problems. The key of FMA is replacing the far-apart groups interactions by clusters interactions, which can be evaluated by applying corresponding addition theorem to the kernel function. FMA can accelerate the operations of matrix-vector multiplication in the order of $O(N^{1.5})$. To further enhance the advantages of using FMA, when the groups are really far away from each other, we can aggregate a few far-field groups together into a larger group and transfer the far-field interactions from the centers of the smaller groups to the center of the larger group, namely multilevel FMA (MLFMA), resulting in $O(N\log N)$ operations of matrix-vector multiplication. The similar idea has been applied in the famous treecode algorithm[3].

Either matrix compression algorithms or MLFMA can be applied to form the direct integral solver for large-scale IE problems. We can split matrix $[A]$ into two parts, near-field interactions $[D]$, which is very sparse, and far-field interactions $[A^{far}]$. By using ID or FMA, $[A^{far}]$ is a low-rank matrix which can be represented in compressed form as following,

$$A \approx D + A^{far} = D + LSR$$

We can also directly calculate the inversion of $[A]$[4],

$$A^{-1} \approx D^{-1} - D^{-1}L(RD^{-1}L)^{-1}RD^{-1} + D^{-1}L(RD^{-1}L)^{-1}[(RD^{-1}L)^{-1}+S]^{-1}(RD^{-1}L)^{-1}RD^{-1}$$

By using the same ideas as discussed above, we can further represent the MoM matrix $[A]$ as:

$$A \approx D^{(1)} + L^{(1)}[D^{(2)} + L^{(2)}(\cdots D^{(\lambda)} + L^{(\lambda)}SR^{(\lambda)}\cdots)R^{(2)}]R^{(1)}$$

Similarly, we can obtain[4],

$$A^{-1} \approx \mathcal{D}^{(1)} + \mathcal{L}^{(1)}[\mathcal{D}^{(2)} + \mathcal{L}^{(2)}(\cdots \mathcal{D}^{(\lambda)} + \mathcal{L}^{(\lambda)}\mathcal{S}\mathcal{R}^{(\lambda)}\cdots)\mathcal{R}^{(2)}]\mathcal{R}^{(1)}$$

where,

$$\mathcal{D}^{(\lambda)} = [D^{(\lambda)}]^{-1} - [D^{(\lambda)}]^{-1}L^{(\lambda)}(R^{(\lambda)}[D^{(\lambda)}]^{-1}L^{(\lambda)})^{-1}R^{(\lambda)}[D^{(\lambda)}]^{-1}$$
$$\mathcal{L}^{(\lambda)} = [D^{(\lambda)}]^{-1}L^{(\lambda)}(R^{(\lambda)}[D^{(\lambda)}]^{-1}L^{(\lambda)})^{-1}$$
$$\mathcal{R}^{(\lambda)} = (R^{(\lambda)}[D^{(\lambda)}]^{-1}L^{(\lambda)})^{-1}R^{(\lambda)}[D^{(\lambda)}]^{-1}$$
$$\mathcal{S} = [(R^{(\lambda)}[D^{(\lambda)}]^{-1}L^{(\lambda)})^{-1} + S]^{-1}$$

Since the matrix compression algorithms require forming the full matrix first, the MLFMA is more memory efficient. However, matrix compression algorithms are possible to obtain matrices $[D^{(\lambda)}]$ in form of block diagonal, MLFMA will obtain them in sparse form, resulting in full matrices of $[D^{(\lambda)}]^{-1}$, so it is impractical to resolve a direct inversion by using MLFMA. On the other hand, the matrix compression algorithms is less memory efficient. However, it is sufficient to form a direct inversion of the matrix, which is a considerable advantage when we need to solve a linear system with multiple right-hand sides.

## REFERENCES

[1] S. Kurz, O. Rain, and S. Rjasanow, "The adaptive cross-approximation technique for the 3-D boundary-element method," *IEEE Trans. Magn.*, vol. 38, no. 2, 2002.

[2] F. Woolfe, E. Liberty, V. Rokhlin, and M. Tygert, "A fast randomized algorithm for the approximation of matrices," *Appl. Comput. Harmon. Anal.*, vol. 25, 2008.

[3] A. Christlieb, R. Krasny, and J. Verboncoeur, "A treecode algorithm for simulat-ing electron dynamics in a penning-malmberg trap," *Computer Physics Communications*, vol. 164, 2004.

[4] A. Gillman, P. M. Young, and P.-G. Martinsson, "A direct solver with O(N) complexity for integral equations on one-dimensional domains," in *Frontiers of Mathematics in China*, vol. 7, no. 2, April 2012.

*Naiguang Lei can be reached by E-mail at leinaiguang@gmail.com. He is a software engineer at Mentor, a Siemens Business, in Wilsonville, Oregon.*

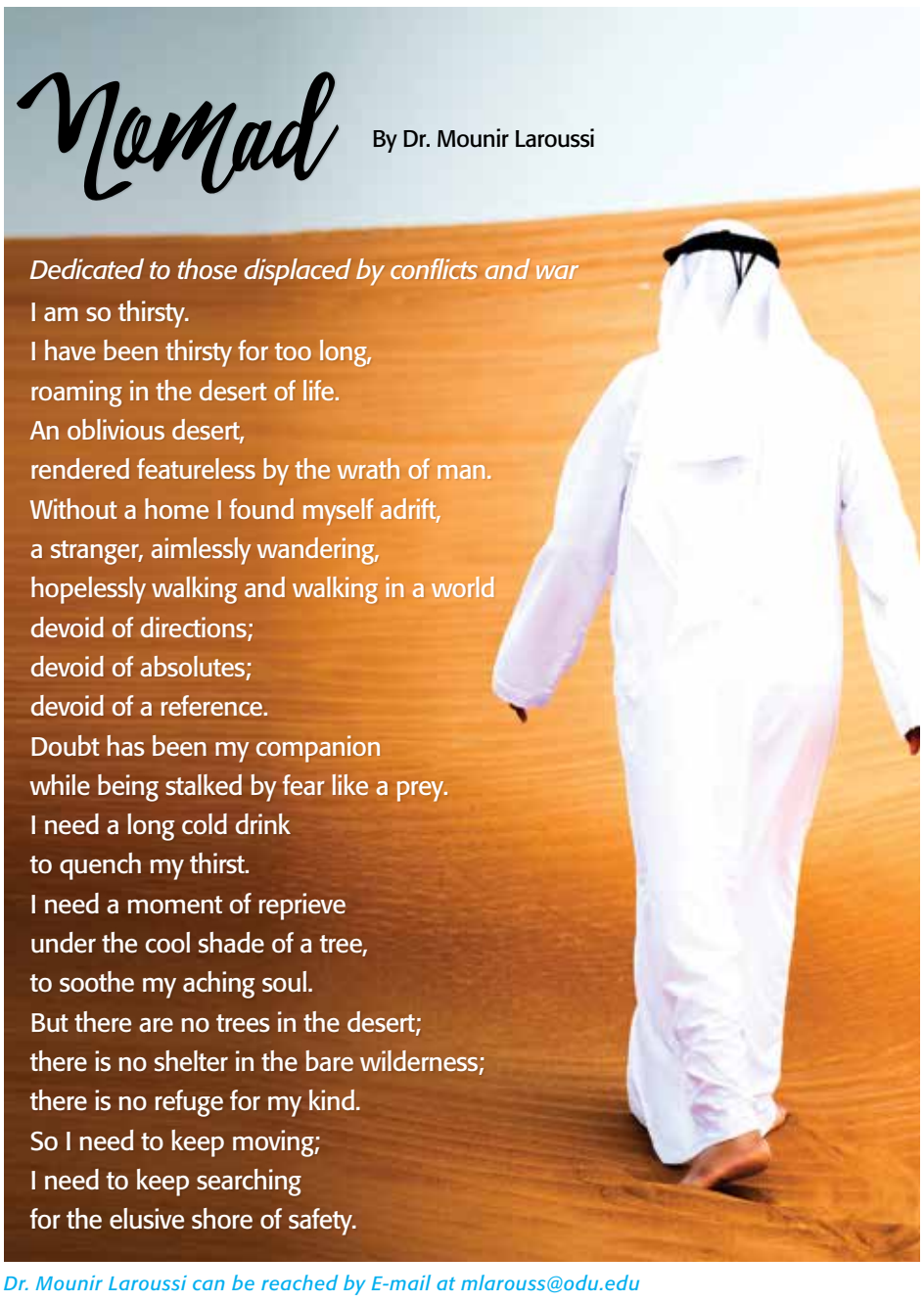


*Dr. Mounir Laroussi can be reached by E-mail at mlarouss@odu.edu*

# IEEE DataPort

Would you like to get more exposure for your valuable research? Do you have plasma data, radiation hardness data, or particle physics datasets that require long-term storage and accessibility? You are invited to experience the exciting new data repository developed by IEEE called IEEE DataPort™! This IEEE data repository offers many benefits to our society members as well as researchers, data analysts, and institutions around the globe, and it is currently available at no cost. Access IEEE DataPort at https://ieee-dataport.org.

"As researchers, we often spend much time collecting a data set. After developing a methodology and analytics with the data set, we find a lack of other data sets to compare and to continue with our work. IEEE DataPort collects data for scientists and engineers and enables sharing so that we can all work on our research without worrying about any lack of data," says Ray Liu, IEEE Division IX Director.

IEEE DataPort offers the following benefits to authors, researchers, industry data analysts, data scientists, and members of the global technical community at large:

- Accepts and stores datasets up to 2 TB in size and can accept multiple file uploads
- Full integration with AWS (Amazon Web Services) to facilitate data analysis in the Cloud
- Persistent Digital Object Identifier (DOI) for each uploaded dataset and analysis
- Retains referenceable datasets that can support research reproducibility
- Supports government or other funder mandates for open access to research data
- Hosts and manages Data Competitions

"IEEE DataPort is a wonderful repository of datasets and the easiest way to host datasets that are accessible worldwide. As a data owner, it releases me from tedious work such as identifying a host server, building corresponding websites, regular maintenance, payments, etc. Recently, I shared VideoSet on DataPort, and it works well no matter where a user is from. It has a user-friendly interface and excellent download speed. It also supports direct feedback and response between users and owners," says Haiqiang Wang, Ph.D. student at the University of Southern California.

Dr. Stefan Ritt who heads the muon physics group at the Paul Scherrer Institute in Switzerland says, "Many members of our society do measurements in plasma physics, radiation hardness testing or elementary particle physics. Sharing some of these data will not only be beneficial for alternative data analysis, but also mandated by some funding agencies in the future." He adds, "this is not only for 'big data', but also 'small data'." Members of the IEEE Nuclear and Plasma Sciences Society and members of the global technical community at large can access IEEE DataPort at https://ieee-dataport.org. Access IEEE DataPort the same way you login to your IEEE account; if you do not yet have an IEEE account you can get one free at https://www.ieee.org/profile/public/createwebaccount/showRegister.html (no membership required).

Please know that standard datasets (non-Open Access datasets) up to 2 TB can always be uploaded at no cost! And if you need to upload an Open Access dataset, that data can be uploaded to IEEE DataPort at no cost using coupon code OPENACCESS1.

IEEE DataPort can bring additional attention to your important efforts. Visit the site today at https://ieee-dataport.org.

*Questions and comments on IEEE DataPort? Contact melissa.handa@ieee.org.*





## NEWSLETTER EDITOR:

Albe Dawson Larsen
E-mail: a.m.larsen@ieee.org

## EDITOR EMERITUS:

W. Kenneth Dawson
E-mail: k.dawson@ieee.org

## CONTRIBUTORS LISTED ALPHABETICALLY:

Janet Barth, Ken Dawson, Teresa Farris, Steve Gitomer, Melissa Handa, Mounir Laroussi, Albe Larsen, Alexandre Le Roch, Naiguang Lei, Chong Liu, Paul Marsden, Andreas Neuber, Charles Neumeyer, Bryan Oliver, Ronald Pease, Martin Purschke, Stefan Ritt,.

## CONTRIBUTED ARTICLES

Publicity releases for forthcoming meetings, items of interest from local chapters, committee reports, announcements, awards, or other materials requiring society publicity or relevant to NPSS should be submitted to the Newsletter Editor by January 5th, 2018 for publication in the March 2018 Newsletter.

News articles are actively solicited, particularly related to important R&D activities, significant industrial applications, early reports on technical breakthroughs, accomplishments at the big laboratories and similar subjects. The various *Transactions*, of course, deal with formal treatment in depth of technical subjects. News articles should have an element of general interest or contribute to a general understanding of technical problems or fields of technical interest or could be assessments of important ongoing technical endeavors.

Advice on possible authors or offers of such articles are invited by the editor.